UNIVERSITY OF BIRMINGHAM

UBRacing

Car 82

Cost and Manufacturing Event

Cost Explanation Supporting Document

Contents

Contents.....2
Brake System.....3
Part Drawings.....3
Chassis and Body.....9
Part Drawings.....9
Assembly Drawings.....115
Drivetrain.....116
Part Drawings.....116
Assembly Drawings.....127
Engine and Tractive System.....130
Part Drawings.....130
Assembly Drawings.....162
Grounded Low Voltage System.....163
Circuit Diagrams.....163
Wiring Harness Drawings.....177
Steering System.....187
Part Drawings.....187
Assembly Drawings.....210
Suspension System.....215
Part Drawings.....215
Assembly Drawings.....247
Wheels and Tyres.....249
Part Drawings.....245
Assembly Drawings.....259

REV	DESCRIPTION	INIT	DATE
01A	INITIAL RELEASE	LPT	18/02/2025

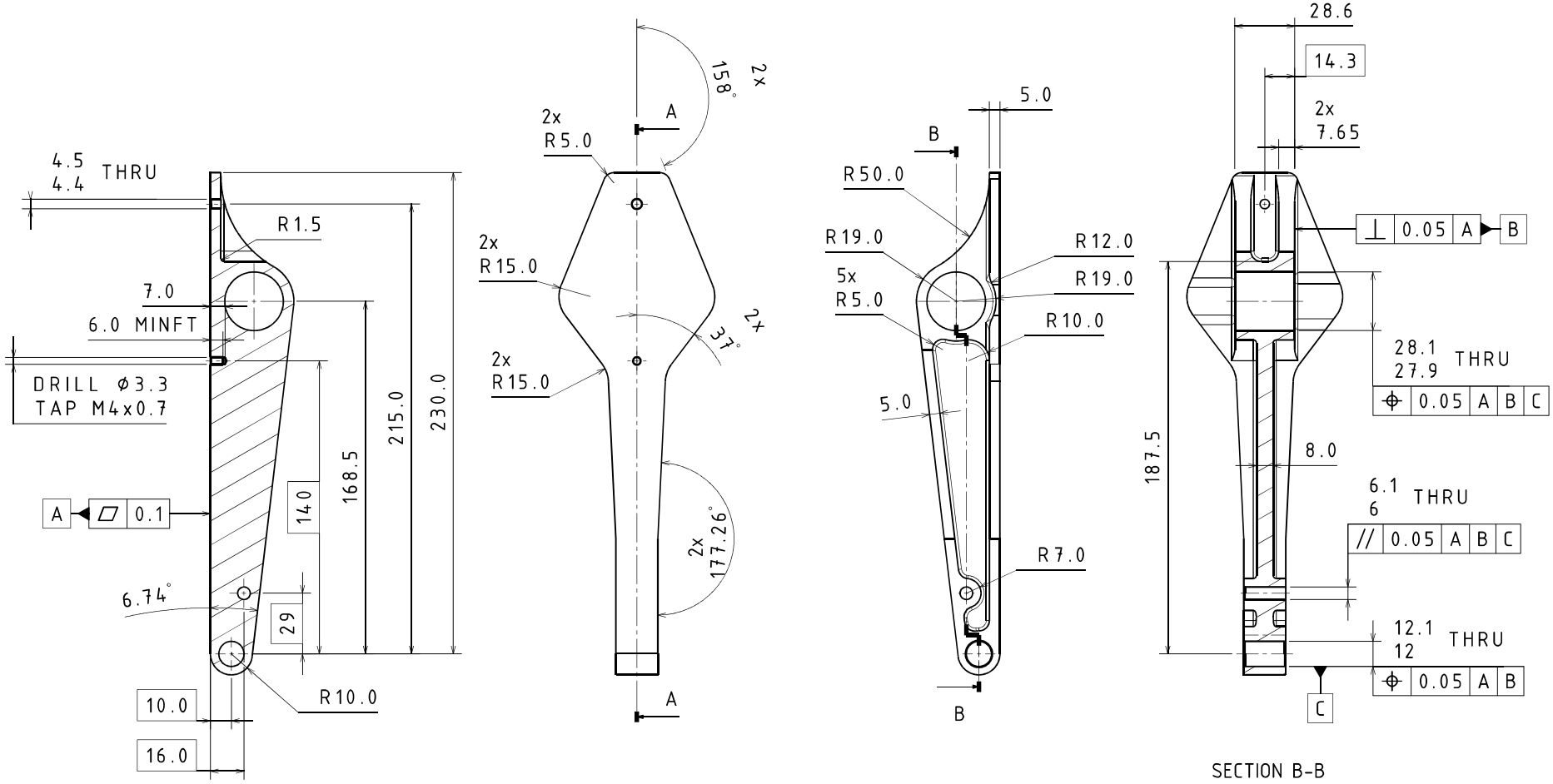

NOTES:
1) MACHINE UNDIMENSIONED FEATURES TO CAD DATA ⌓ 0.2
2) REMOVE BURRS AND SHARP EDGES

UBRacing	MATERIAL CERTIFICATE REQUIRED DIMENSIONS IN MILIMETRES U.O.S	COMPONENT MASS (kg)	0.294	MATERIAL SPEC	ALUMINIUM 7075
				HEAT TREATMENT	N/A
A3	IF IN DOUBT - ASK DO NOT SCALE 0 DECIMAL PLACES ±0.50 1 DECIMAL PLACE ±0.25 2 DECIMAL PLACES ±0.10 3 DECIMAL PLACES ±0.02 GENERAL CONCENTRICITY 0.1 TIR ANGULAR TOLERANCE ±0.25° REMOVE BURRS AND SHARP EDGES	DRAWN BY	LPT	SURFACE TREATMENT	N/A
				DESCRIPTION	BRAKE PEDAL ARM
TEL.	+44 (0)121 414 4218				
E-MAIL.	ubracing@gmail.com				
This drawing and the copyright herein are the property of UBRacing. It is private & confidential and is issued on the express condition that it is not modified,copied or communicated to any other party without the written consent of UBRacing.		SCALE	1:2	SHEET 1/1	PART NUMBER UBR28_PB_201_03A

REV	DESCRIPTION	INIT	DATE
01A	INITIAL RELEASE	LPT	18/02/2025

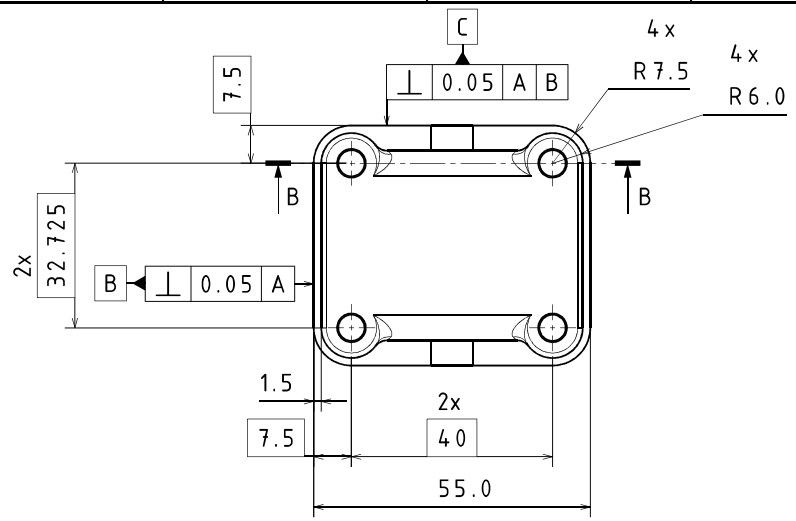

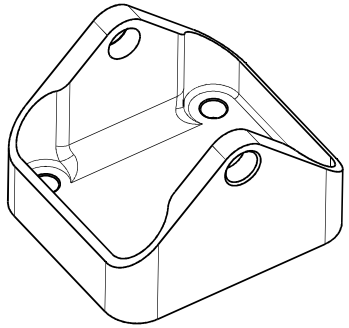

ISOMETRIC VIEW

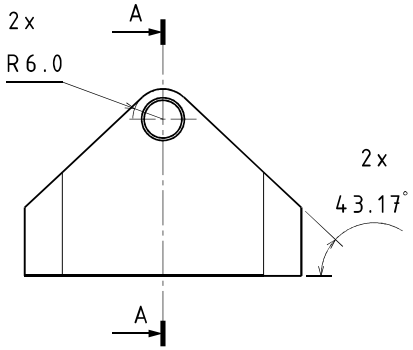

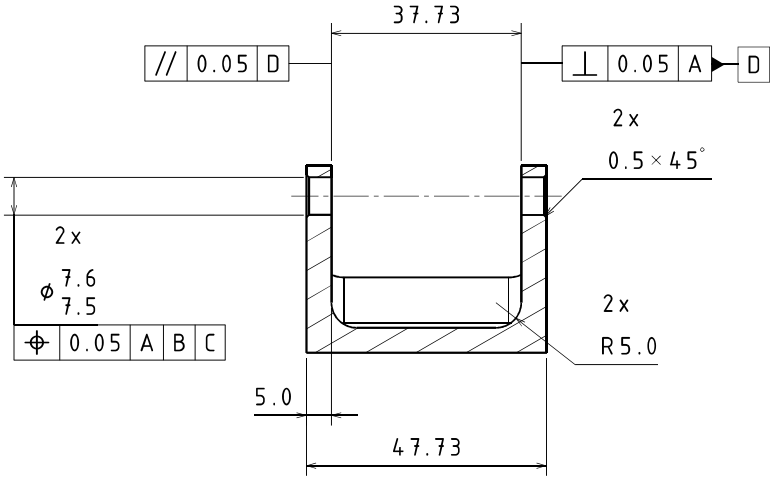

SECTION A-A

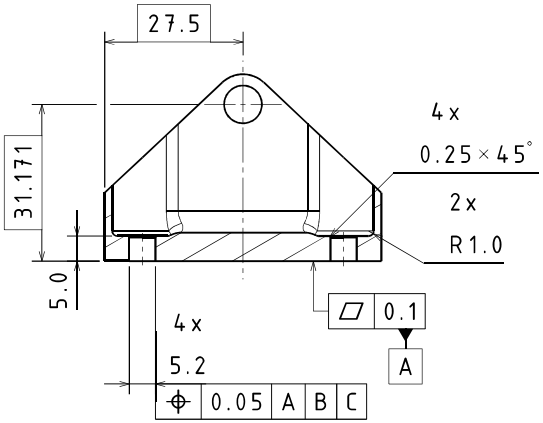

SECTION B-B

NOTES

1) BREAK ALL SHARP EDGES

2) REFER TO CAD DATA FOR ANY UNDIMENSIONED FEATURES

UBRacing	MATERIAL CERTIFICATE REQUIRED DIMENSIONS IN MILIMETRES U.O.S	COMPONENT MASS (kg)	0.064	MATERIAL SPEC	ALUMINIUM 7075
				HEAT TREATMENT	N/A
A3	IF IN DOUBT - ASK DO NOT SCALE 0 DECIMAL PLACES ±0.50 1 DECIMAL PLACE ±0.25 2 DECIMAL PLACES ±0.10 3 DECIMAL PLACES ±0.02 GENERAL CONCENTRICITY 0.1 TIR ANGULAR TOLERANCE ±0.25° REMOVE BURRS AND SHARP EDGES	DRAWN BY	LPT	SURFACE TREATMENT	N/A
				DESCRIPTION	BRAKE PEDAL ASSY FRONT CLEVIS
TEL.	+44 (0)121 414 4218				
E-MAIL.	ubracing@gmail.com				
This drawing and the copyright herein are the property of UBRacing. It is private & confidential and is issued on the express condition that it is not modified,copied or communicated to any other party without the written consent of UBRacing.		SCALE	1:1	SHEET 1/1	PART NUMBER UBR28_PB_202_01A

REV	DESCRIPTION	INIT	DATE
01A	INITIAL RELEASE	LPT	18/02/2025
01B	SECTION C-C DRAWING UPDATES	LPT	11/03/2025

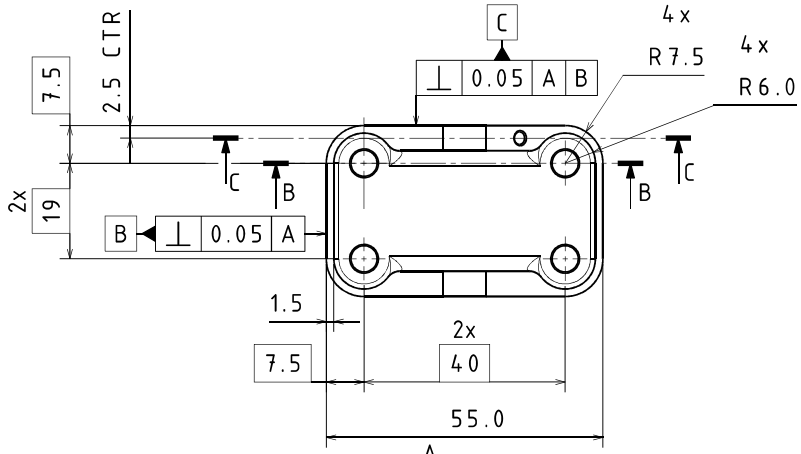

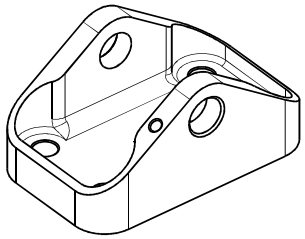

ISOMETRIC VIEW

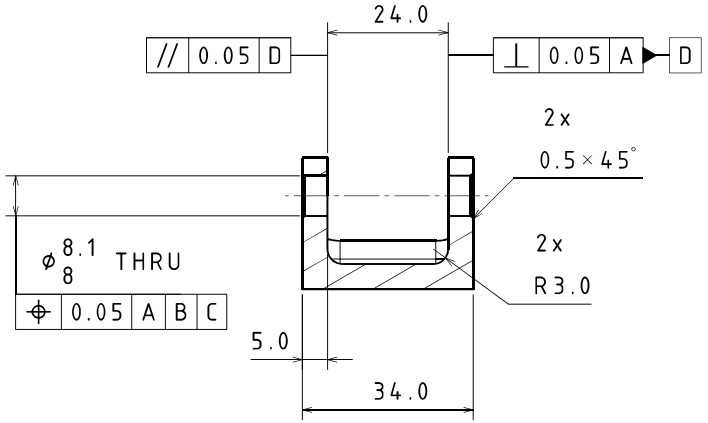

SECTION A-A

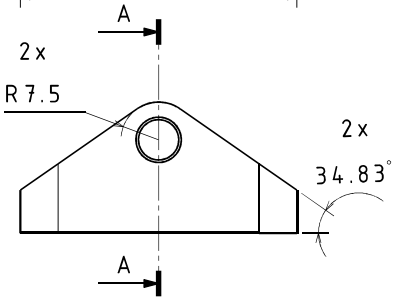

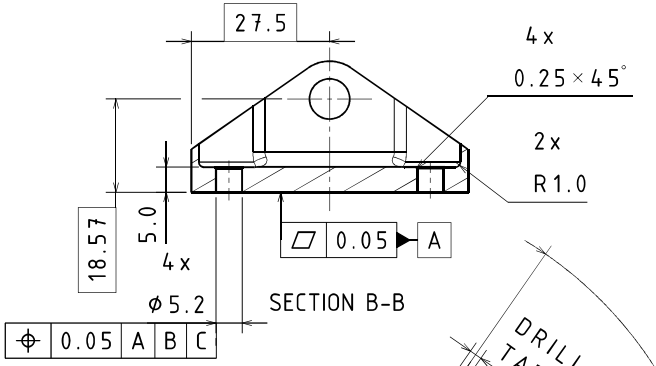

SECTION B-B

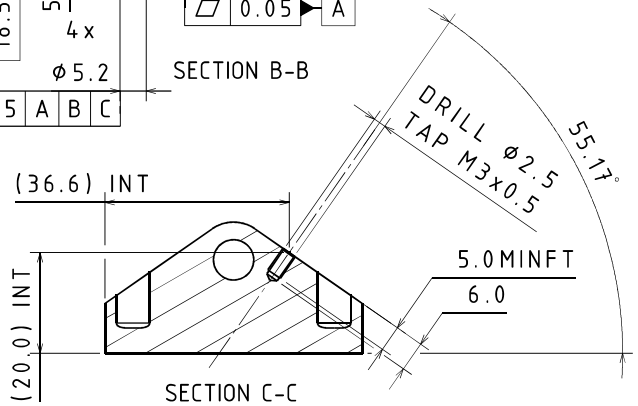

SECTION C-C

UBRacing

A3

IF IN DOUBT - ASK

DO NOT SCALE

TEL. +44 (0)121 414 4218

E-MAIL. ubracing@gmail.com

MATERIAL CERTIFICATE REQUIRED

DIMENSIONS IN MILIMETRES U.O.S

0 DECIMAL PLACES	±0.50
1 DECIMAL PLACE	±0.25
2 DECIMAL PLACES	±0.10
3 DECIMAL PLACES	±0.02
GENERAL CONCENTRICITY	0.1 TIR
ANGULAR TOLERANCE	±0.25°

REMOVE BURRS AND SHARP EDGES

COMPONENT MASS (kg): 0.041

DRAWN BY: LPT

MATERIAL SPEC: ALUMINIUM 7075

HEAT TREATMENT: N/A

SURFACE TREATMENT: N/A

DESCRIPTION: BRAKE PEDAL ASSY REAR CLEVIS

SCALE: 1:1

SHEET: 1/1

PART NUMBER: UBR28_PB_203_02A

This drawing and the copyright herein are the property of UBRacing. It is private & confidential and is issued on the express condition that it is not modified,copied or communicated to any other party without the written consent of UBRacing.

REV	DESCRIPTION	INIT	DATE
01A	INITIAL RELEASE	LPT	09/06/2025

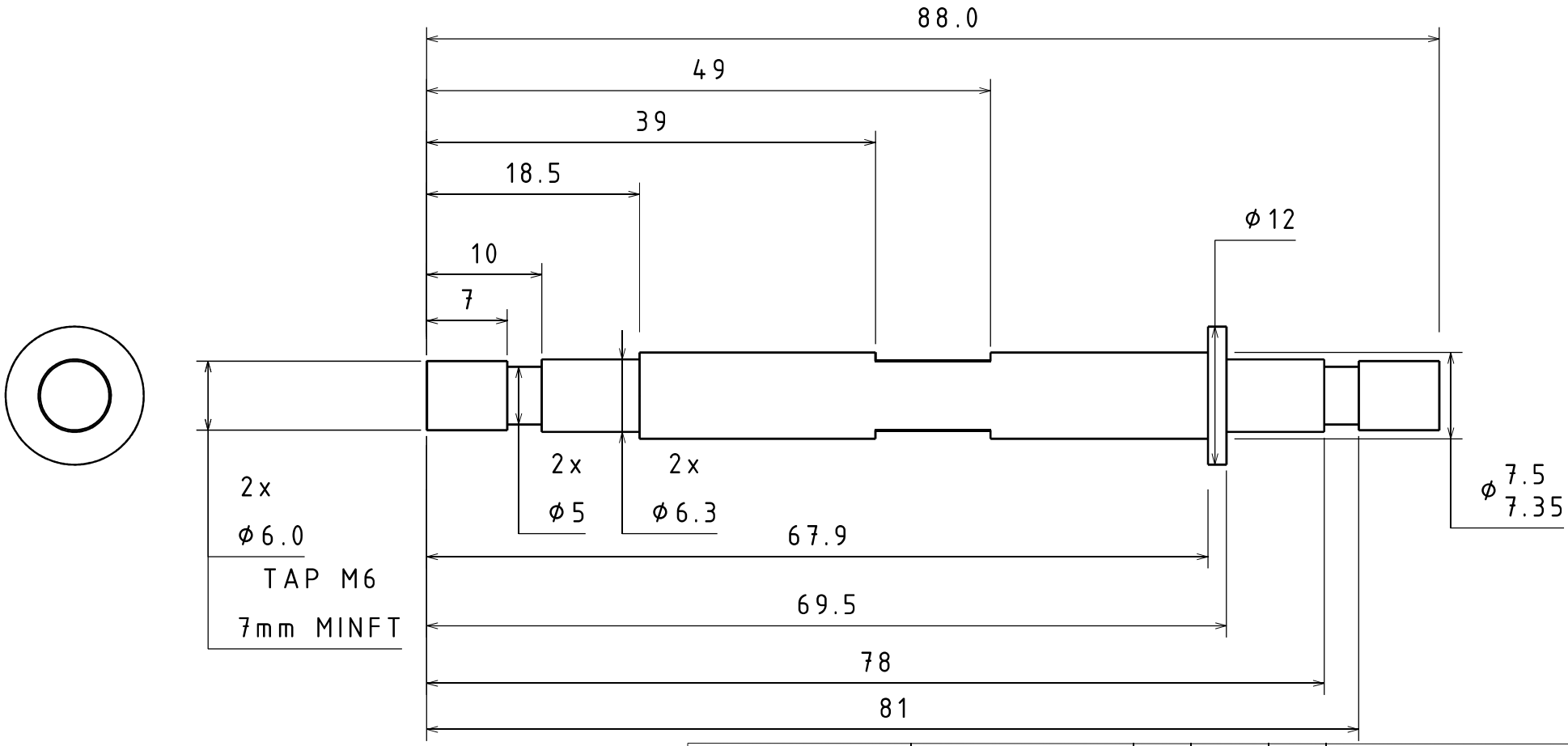

NOTES:

1) FLAT EDGES ON MILL

2) 5 mm OD SECTIONS ARE BOTH 3 mm WIDE, MACHINE USING PARTING TOOL

UBRACING	MATERIAL CERTIFICATE REQUIRED DIMENSIONS IN MILLIMETRES U.O.S	COMPONENT MASS (kg)	MATERIAL SPEC: ALUMINIUM HEAT TREATMENT: N/A SURFACE TREATMENT: N/A
A4	IF IN DOUBT - ASK DO NOT SCALE	DRAWN BY: LPT	DESCRIPTION: CLEVIS MCYL BAR
TEL.	+44 (0)121 414 4218	SCALE: 2:1	SHEET: 1/1
EMAIL	ubracing@gmail.com		PART NUMBER: UBR28_PB_N_204_02A

0 DECIMAL PLACES	±0.50
1 DECIMAL PLACE	±0.25
2 DECIMAL PLACES	±0.10
3 DECIMAL PLACES	±0.02
GENERAL CONCENTRICITY	0.1 TIR
ANGULAR TOLERANCE	±0.25°

REMOVE BURRS AND SHARP EDGES

This drawing and the copyright herein are the property of UBRacing. It is private & confidential and is issued on the express condition that it is not modified,copied or communicated to any other party without the written consent of UBRacing.

REV	DESCRIPTION	INIT	DATE
01A	INITIAL RELEASE	LPT	13/06/2025

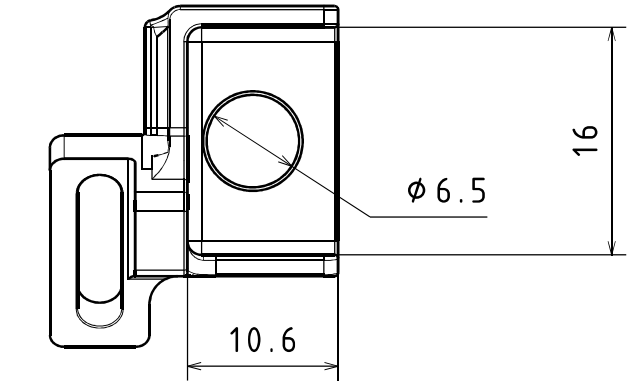

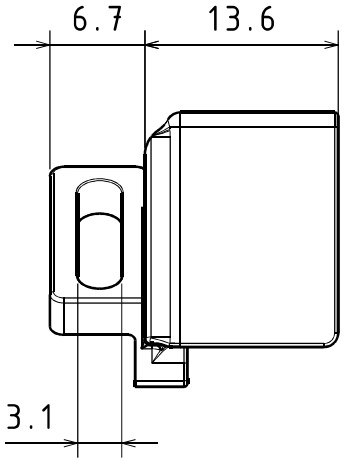

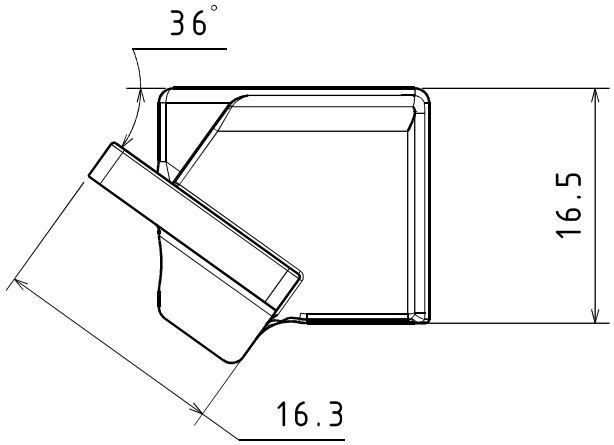

NOTES:

1) 3D PRINTED COMPONENT

UBRacing	MATERIAL CERTIFICATE REQUIRED DIMENSIONS IN MILIMETRES U.O.S	COMPONENT MASS (kg)	0.008	MATERIAL SPEC	CARBON NYLON FILAMENT
				HEAT TREATMENT	N/A
A4	IF IN DOUBT - ASK DO NOT SCALE	DRAWN BY	LPT	SURFACE TREATMENT	N/A
	0 DECIMAL PLACES ±0.50 1 DECIMAL PLACE ±0.25 2 DECIMAL PLACES ±0.10 3 DECIMAL PLACES ±0.02 GENERAL CONCENTRICITY 0.1 TIR ANGULAR TOLERANCE ±0.25°			DESCRIPTION	BOTS BRACKET
TEL.	+44 (0)121 414 4218				
E-MAIL.	ubracing@gmail.com				
	REMOVE BURRS AND SHARP EDGES				
		SCALE	2:1	SHEET 1/1	PART NUMBER UBR28_PB_N_206_01A

This drawing and the copyright herein are the property of UBRacing. It is private & confidential and is issued on the express condition that it is not modified, copied or communicated to any other party without the written consent of UBRacing.

REV	DESCRIPTION	INIT	DATE
01A	INITIAL RELEASE	HCF	11/03/2024

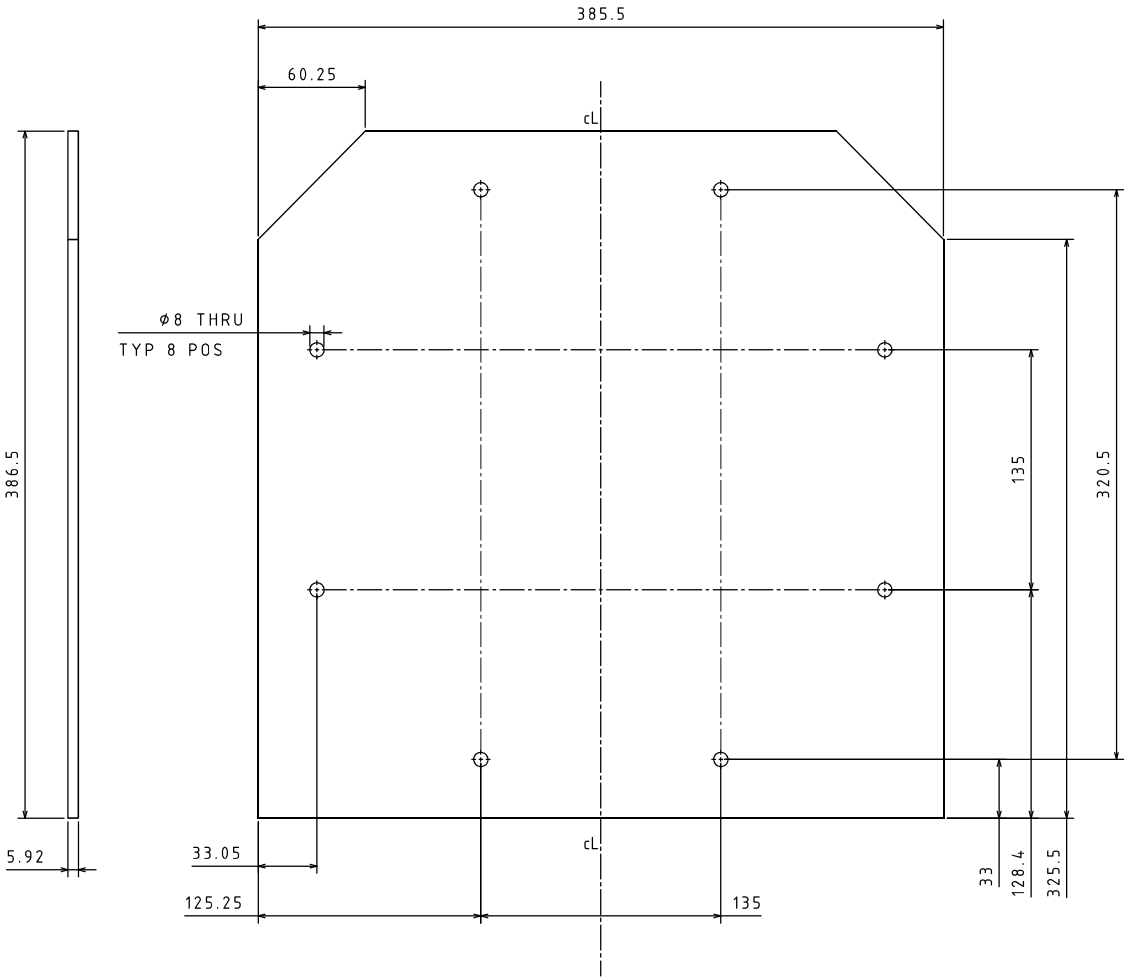

LAMINATE TABLE				
OP NO.	MATERIAL SPECIFICATION	ORIENTATION	POSITION	LAID UP BY
10	CHECK ALL TOOLING IS CORRECT & RELEASED			
20	EPC300-C380T-HS-12K-40-1250-BK	45	1 PLY, ALL OVER	
30	DEBULK FOR 10 MINUTES			
40	MTC510-UD300-HS-33%RW-300P	0	1 PLY, ALL OVER	
50	EPC300-C380T-HS-12K-40-1250-BK	0/90	1 PLY, ALL OVER	
60	EPC300-C380T-HS-12K-40-1250-BK	45	1 PLY, ALL OVER	
70	EPC300-C380T-HS-12K-40-1250-BK	0/90	1 PLY, ALL OVER	
80	DEBULK FOR 10 MINUTES			
90	EPC300-C380T-HS-12K-40-1250-BK	45	1 PLY, ALL OVER	
100	EPC312-A170S-45-1200-BK	0/90	1 PLY, ALL OVER	
110	EPC312-A170S-45-1200-BK	45	1 PLY, ALL OVER	
120	EPC312-A170S-45-1200-BK	45	1 PLY, ALL OVER	
130	DEBULK FOR 10 MINUTES			
140	EPC312-A170S-45-1200-BK	0/90	1 PLY, ALL OVER	
150	EPC300-C380T-HS-12K-40-1250-BK	45	1 PLY, ALL OVER	
160	EPC300-C380T-HS-12K-40-1250-BK	0/90	1 PLY, ALL OVER	
170	EPC300-C380T-HS-12K-40-1250-BK	45	1 PLY, ALL OVER	
180	DEBULK FOR 10 MINUTES			
190	EPC300-C380T-HS-12K-40-1250-BK	0/90	1 PLY, ALL OVER	
200	MTC510-UD300-HS-33%RW-300P	0	1 PLY, ALL OVER	
210	EPC300-C380T-HS-12K-40-1250-BK	45	1 PLY, ALL OVER	
CURE	VACUUM BAG AND CURE: RAMP UP TO 80C, HOLD FOR 30 MINS, RAMP UP TO 120C, HOLD FOR 120 MINS, RAMP DOWN			

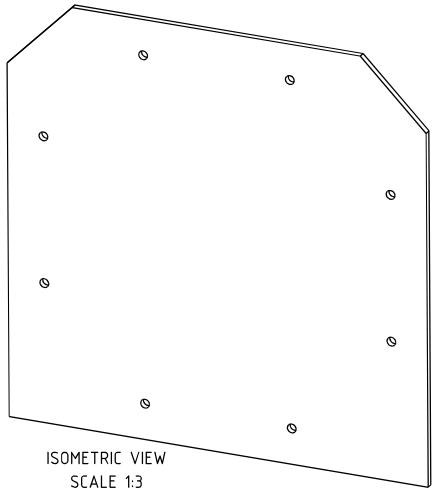

ISOMETRIC VIEW
SCALE 1:3

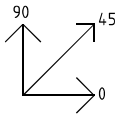

NOTES:

- PART IS SYMMETRICAL ABOUT CENTRELINE
- LAYUP & CURE AS DETAILED IN LAMINATE TABLE
- LAMINATE OVERLENGTH TO ALLOW FOR POST CURE TRIM OPERATION
- RECORD COMPONENT WEIGHT
- STICKER PART MARK WHERE SHOWN

UBRacing

A2 | IF IN DOUBT - ASK DO NOT SCALE

TEL. +44 (0)121 414 4218

E-MAIL. ubracing@gmail.com

MATERIAL CERTIFICATE REQUIRED

DIMENSIONS IN MILIMETRES U.O.S

0 DECIMAL PLACES	±0.50
1 DECIMAL PLACE	±0.25
2 DECIMAL PLACES	±0.10
3 DECIMAL PLACES	±0.02
GENERAL CONCENTRICITY	0.1 TIR
ANGULAR TOLERANCE	±0.25°

REMOVE BURRS AND SHARP EDGES

COMPONENT MASS (kg): 1.35

MATERIAL SPEC: SEE NOTES

HEAT TREATMENT: N/A

SURFACE TREATMENT: N/A

DRAWN BY: HCF

DESCRIPTION: ANTI-INTRUSION PLATE

SCALE: 1:2

SHEET: 1/1

PART NUMBER: UBR28_CH_N_920

This drawing and the copyright herein are the property of UBRacing. It is private & confidential and is issued on the express condition that it is not modified,copied or communicated to any other party without the written consent of UBRacing.

REV	DESCRIPTION	INIT	DATE
01A	INITIAL RELEASE	MAS	10.04.2025

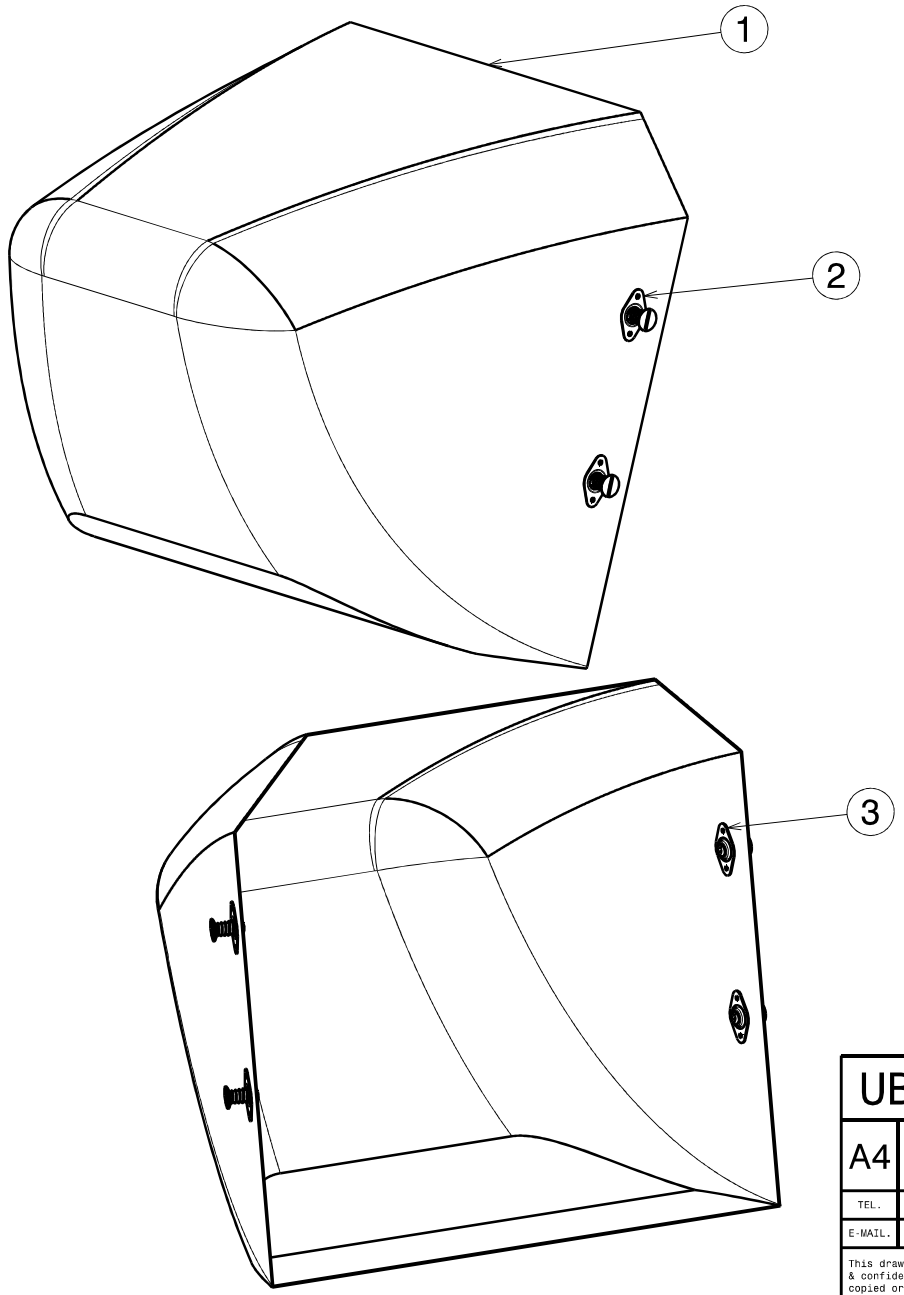

Bill of Material: UBR28_CH_N_112_01A

Item	Part No.	Part Name	QTY.
1	UBR28_CH_N_012_01A	Part	1
2	D4-EHF5-75ZCTNA	QUARTER TURN FASTENER	4
3	UBR28_CH_N_023_01A	BACKING PLATE	4

UBRacing

A4

IF IN DOUBT - ASK

DO NOT SCALE

TEL. +44 (0)121 414 4218

E-MAIL. ubracing@gmail.com

MATERIAL CERTIFICATE REQUIRED

DIMENSIONS IN MILIMETRES U.O.S

0 DECIMAL PLACES	±0.50
1 DECIMAL PLACE	±0.25
2 DECIMAL PLACES	±0.10
3 DECIMAL PLACES	±0.02
GENERAL CONCENTRICITY	0.1 TIR
ANGULAR TOLERANCE	±0.25°

REMOVE BURRS AND SHARP EDGES

COMPONENT MASS (kg): 0.560

DRAWN BY: MAS

MATERIAL SPEC	N/A
HEAT TREATMENT	N/A
SURFACE TREATMENT	N/A

DESCRIPTION: NOSECONE ASSY

SCALE 1:5

SHEET 1/1

PART NUMBER UBR28_CH_N_112_01A

This drawing and the copyright herein are the property of UBRacing. It is private & confidential and is issued on the express condition that it is not modified, copied or communicated to any other party without the written consent of UBRacing.

REV	DESCRIPTION	INIT	DATE
01A	INITIAL RELEASE	RGA	9/12/24

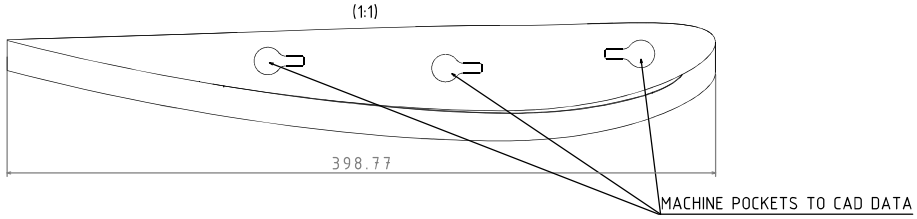

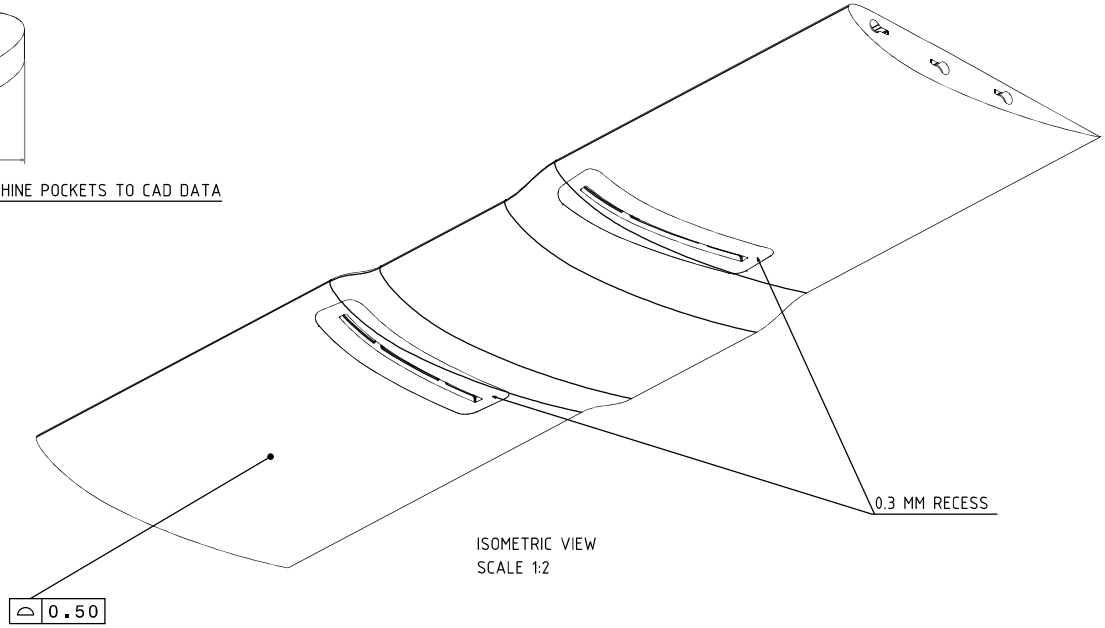

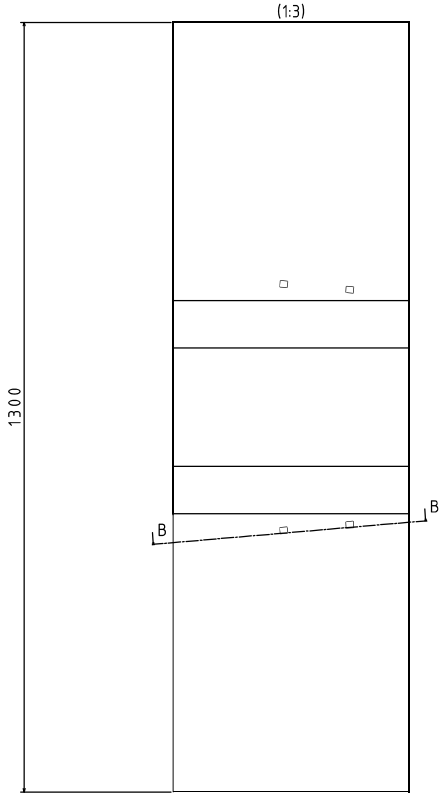

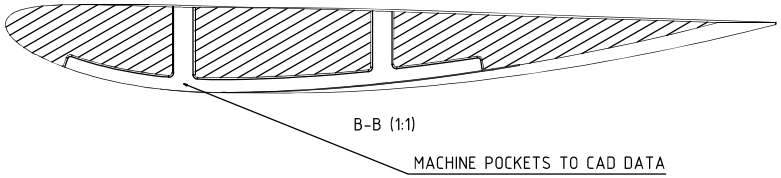

NOTES:

- MACHINE FROM ROHACELL 51-IG-F
- MACHINE & INSPECT TO CAD FILE UBR28_AE_N_111_01A 0.50

UBRacing	MATERIAL CERTIFICATE REQUIRED DIMENSIONS IN MILIMETRES U.O.S	COMPONENT MASS (kg)	N/A	MATERIAL SPEC	ROHACELL 51-IG-F
				HEAT TREATMENT	N/A
A0	IF IN DOUBT - ASK DO NOT SCALE	DRAWN BY	RGA	SURFACE TREATMENT	N/A
	0 DECIMAL PLACES ±0.50 1 DECIMAL PLACE ±0.25 2 DECIMAL PLACES ±0.10 3 DECIMAL PLACES ±0.02 GENERAL CONCENTRICITY 0.1 TIR ANGULAR TOLERANCE ±0.25°			DESCRIPTION	Front wing main element rohacell core
TEL.	+44 (0)121 414 4218	CHECKED BY	JDH		
E-MAIL.	ubracing@gmail.com				
	REMOVE BURRS AND SHARP EDGES	SCALE	N/A	SHEET 1/1	PART NUMBER UBR28_AE_N_111_01A

This drawing and the copyright herein are the property of UBRacing. It is private & confidential and is issued on the express condition that it is not modified, copied or communicated to any other party without the written consent of UBRacing.

REV	DESCRIPTION	INIT	DATE
01A	INITIAL RELEASE	RGA	3/6/25

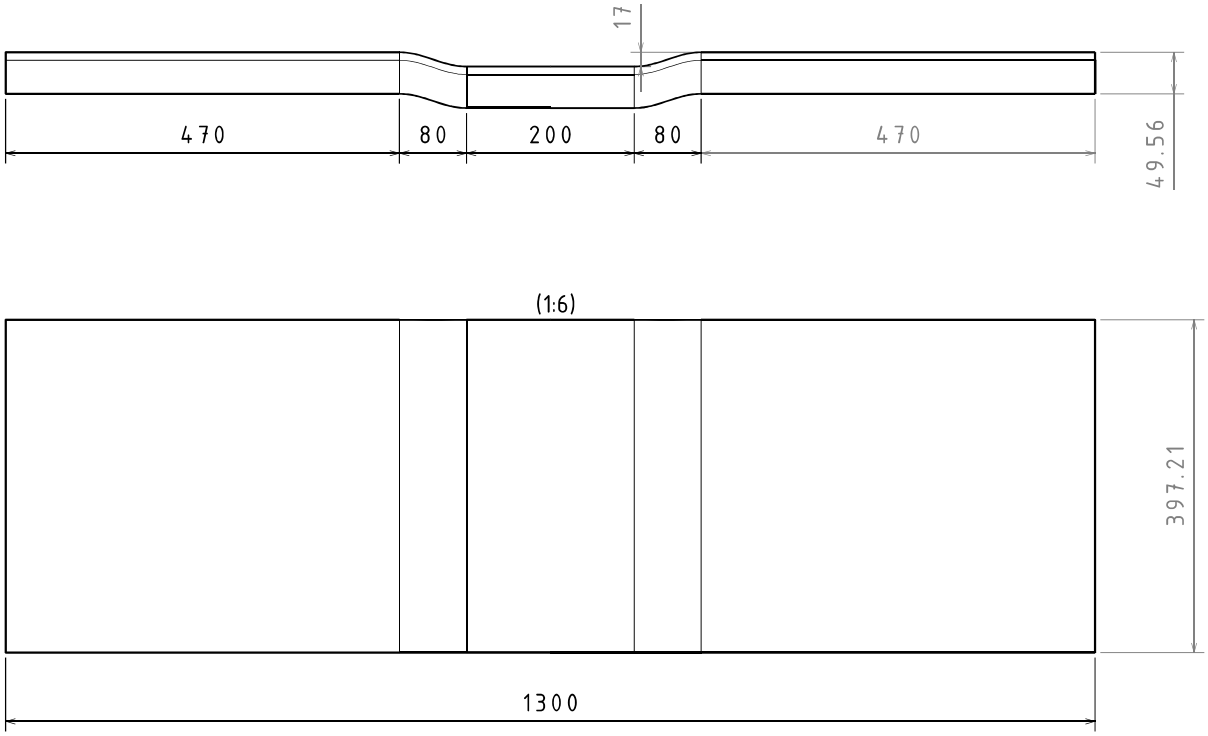

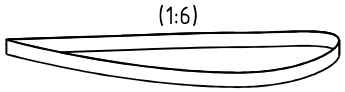

	LAMINATE TABLE		
OP NO.	MATERIAL SPEC	ORIENTATION	POSITION
1	CHECK ALL ROHACELL CORE AND INSERTS ARE CLEAN		
2	ROHACELL CORE AND INSERTS	-	-
3	FILM BOND ADHESIVE	-	1 PLY, ALL OVER
4	EPC300-C245T-HS-3K-42-1250	-	PATCH PLY
5	EPC300-C245T-HS-3K-42-1250	0/90	1 PLY, ALL OVER
6	MYLAR FILM	-	-
CURE	VACUUM BAG AND CURE. RAMP TO 80C, HOLD FOR 30MIN, RAMP TO 120C, HOLD FOR 120MIN, RAMP DOWN		

UBRacing

A3

IF IN DOUBT - ASK

DO NOT SCALE

TEL. +44 (0)121 414 4218

E-MAIL. ubracing@gmail.com

MATERIAL CERTIFICATE REQUIRED

DIMENSIONS IN MILIMETRES U.O.S

0 DECIMAL PLACES	±0.50
1 DECIMAL PLACE	±0.25
2 DECIMAL PLACES	±0.10
3 DECIMAL PLACES	±0.02
GENERAL CONCENTRICITY	0.1 TIR
ANGULAR TOLERANCE	±0.25°

REMOVE BURRS AND SHARP EDGES

This drawing and the copyright herein are the property of UBRacing. It is private & confidential and is issued on the express condition that it is not modified,copied or communicated to any other party without the written consent of UBRacing.

COMPONENT MASS (kg)	0.000	MATERIAL SPEC	COMPOSITE
		HEAT TREATMENT	N/A
DRAWN BY	RGA	SURFACE TREATMENT	N/A
		DESCRIPTION	FRONT WING MAIN ELEMENT
SCALE	1:6	SHEET 1/1	PART NUMBER UBR28_AE_N_112_01A

REV	DESCRIPTION	INIT	DATE
01A	INITIAL RELEASE	RGA	3/6/25

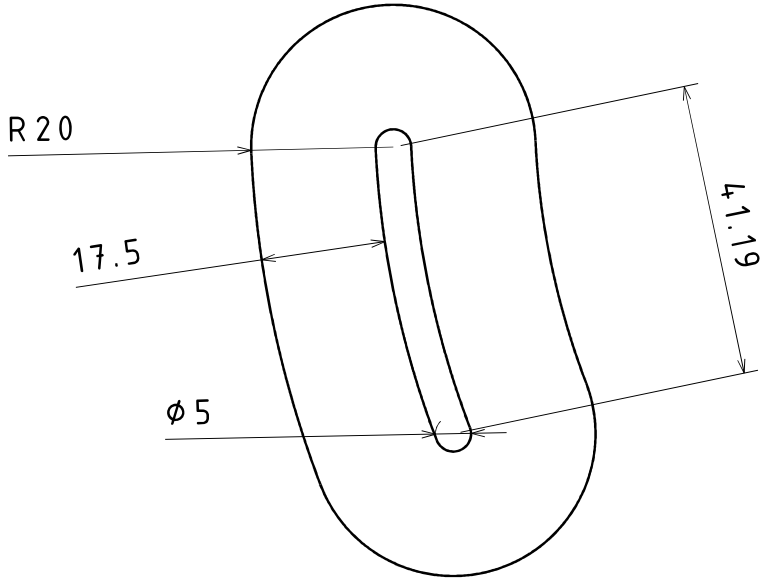

UBRacing

A4

IF IN DOUBT - ASK

DO NOT SCALE

TEL. +44 (0)121 414 4218

E-MAIL. ubracing@gmail.com

MATERIAL CERTIFICATE REQUIRED

DIMENSIONS IN MILIMETRES U.O.S

0 DECIMAL PLACES	±0.50
1 DECIMAL PLACE	±0.25
2 DECIMAL PLACES	±0.10
3 DECIMAL PLACES	±0.02
GENERAL CONCENTRICITY	0.1 TIR
ANGULAR TOLERANCE	±0.25°

REMOVE BURRS AND SHARP EDGES

This drawing and the copyright herein are the property of UBRacing. It is private & confidential and is issued on the express condition that it is not modified, copied or communicated to any other party without the written consent of UBRacing.

COMPONENT MASS (kg): 0.000

DRAWN BY: RGA

SCALE: 1:1

MATERIAL SPEC: 3MM PLYWOOD

HEAT TREATMENT: N/A

SURFACE TREATMENT: N/A

DESCRIPTION: FRONT WING ENDPLATE TO SECOND ELEMENT INSERT

SHEET 1/1

PART NUMBER: UBR28_AE_N_118_01A

REV	DESCRIPTION	INIT	DATE
01A	INITIAL RELEASE	RGA	3/6/25

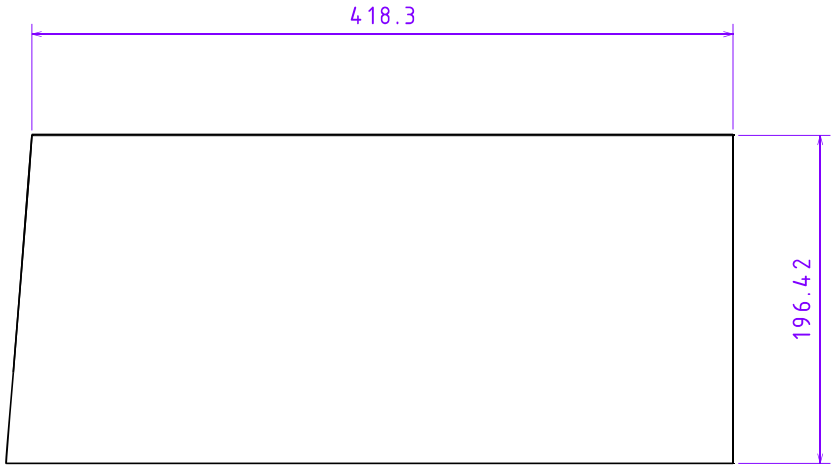

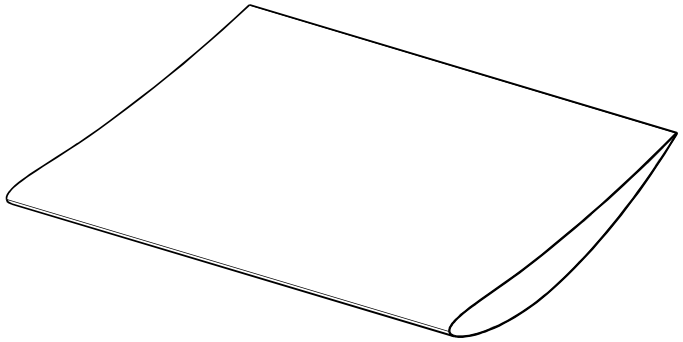

(1:3)

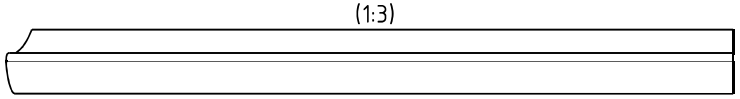

(1:3)

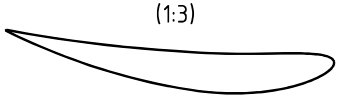

	LAMINATE TABLE		
OP NO.	MATERIAL SPEC	ORIENTATION	POSITION
1	CHECK ALL TOOLING IS CORRECT AND RELEASED		
2	EPC300-C245T-HS-3K-42-1250	45	1 PLY, ALL OVER
3	EPC300-C245T-HS-3K-42-1250	0/90	1 PLY, ALL OVER
4	MYLAR FILM	-	-
CURE	VACUUM BAG AND CURE. RAMP TO 80C, HOLD FOR 30MIN, RAMP TO 120C, HOLD FOR 120MIN, RAMP DOWN		

UBRacing

A3

IF IN DOUBT - ASK

DO NOT SCALE

TEL. +44 (0)121 414 4218

E-MAIL. ubracing@gmail.com

MATERIAL CERTIFICATE REQUIRED

DIMENSIONS IN MILIMETRES U.O.S

0 DECIMAL PLACES	±0.50
1 DECIMAL PLACE	±0.25
2 DECIMAL PLACES	±0.10
3 DECIMAL PLACES	±0.02
GENERAL CONCENTRICITY	0.1 TIR
ANGULAR TOLERANCE	±0.25°

REMOVE BURRS AND SHARP EDGES

This drawing and the copyright herein are the property of UBRacing. It is private & confidential and is issued on the express condition that it is not modified,copied or communicated to any other party without the written consent of UBRacing.

COMPONENT MASS (kg)	0.000	MATERIAL SPEC	COMPOSITE
		HEAT TREATMENT	N/A
DRAWN BY	RGA	SURFACE TREATMENT	N/A
		DESCRIPTION	FRONT WING SECOND ELEMENT
SCALE	1:1	SHEET 1/1	PART NUMBER UBR28_AE_N_121_01A

REV	DESCRIPTION	INIT	DATE
01A	INITIAL RELEASE	RGA	3/6/25

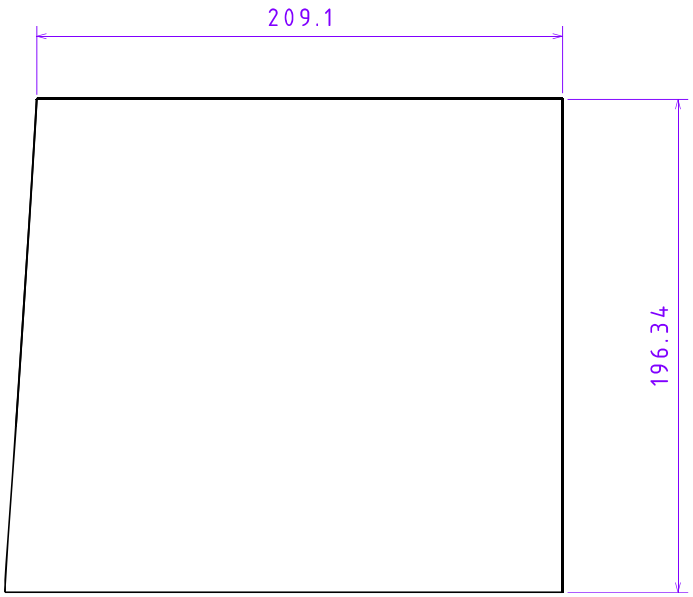

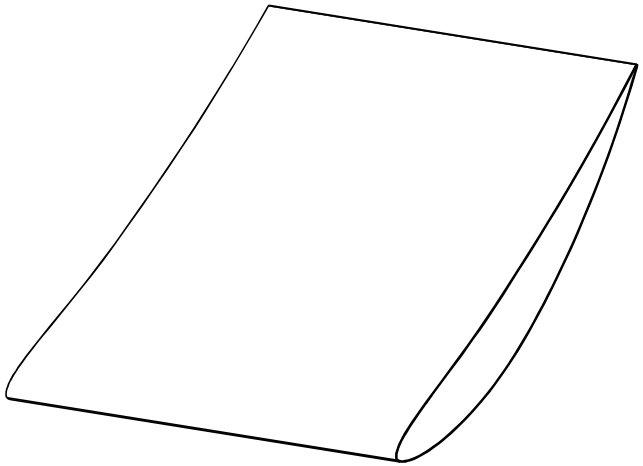

(1:2)

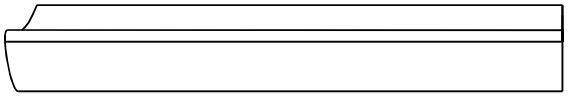

(1:2)

	LAMINATE TABLE		
OP NO.	MATERIAL SPEC	ORIENTATION	POSITION
1	CHECK ALL TOOLING IS CORRECT AND RELEASED		
2	EPC300-C245T-HS-3K-42-1250	45	1 PLY, ALL OVER
3	EPC300-C245T-HS-3K-42-1250	0/90	1 PLY, ALL OVER
4	MYLAR FILM	-	-
CURE	VACUUM BAG AND CURE. RAMP TO 80C, HOLD FOR 30MIN, RAMP TO 120C, HOLD FOR 120MIN, RAMP DOWN		

UBRacing

A3

IF IN DOUBT - ASK

DO NOT SCALE

TEL. +44 (0)121 414 4218

E-MAIL. ubracing@gmail.com

MATERIAL CERTIFICATE REQUIRED

DIMENSIONS IN MILIMETRES U.O.S

0 DECIMAL PLACES	±0.50
1 DECIMAL PLACE	±0.25
2 DECIMAL PLACES	±0.10
3 DECIMAL PLACES	±0.02
GENERAL CONCENTRICITY	0.1 TIR
ANGULAR TOLERANCE	±0.25°

REMOVE BURRS AND SHARP EDGES

This drawing and the copyright herein are the property of UBRacing. It is private & confidential and is issued on the express condition that it is not modified,copied or communicated to any other party without the written consent of UBRacing.

COMPONENT MASS (kg): 0.000

DRAWN BY: RGA

SCALE: 1:2

MATERIAL SPEC: 210 GSM PREPREG CFRP

HEAT TREATMENT: N/A

SURFACE TREATMENT: N/A

DESCRIPTION: FRONT WING THIRD ELEMENT

SHEET 1/1

PART NUMBER: UBR28_AE_N_131_01A

REV	DESCRIPTION	INIT	DATE
01A	INITIAL RELEASE	RGA	3/6/25

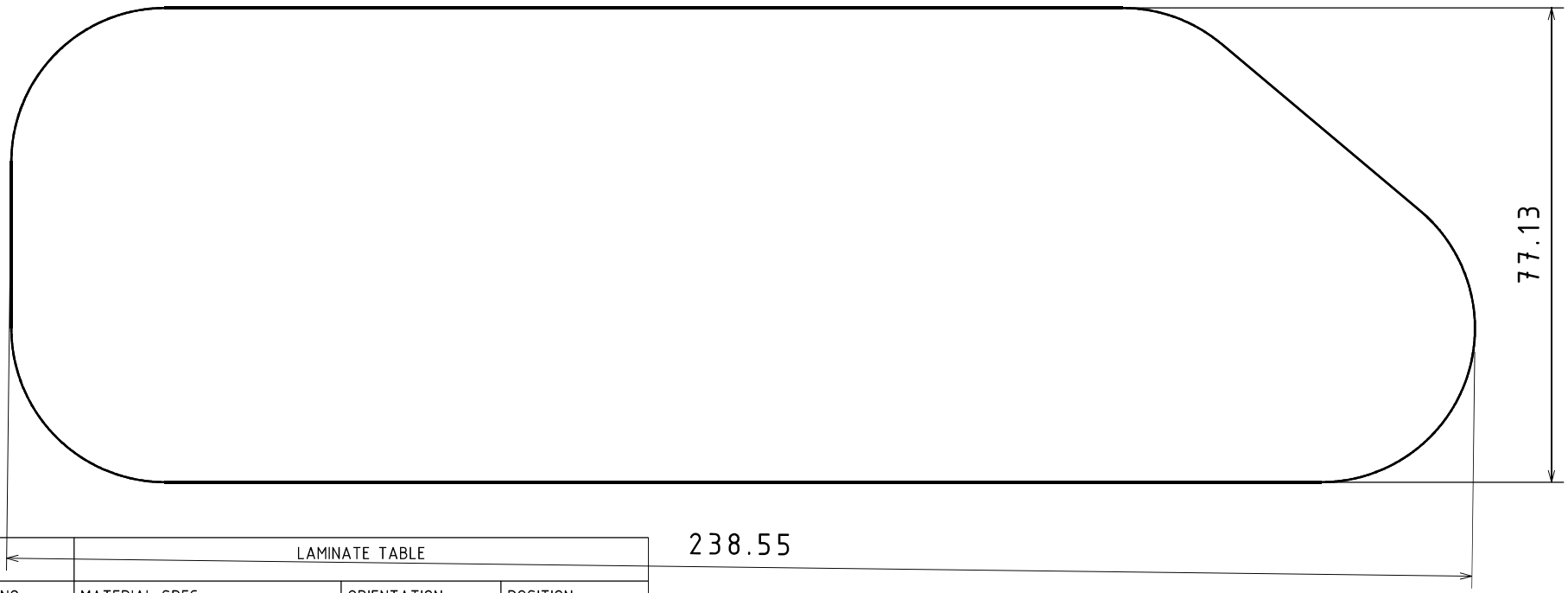

LAMINATE TABLE			
OP NO.	MATERIAL SPEC	ORIENTATION	POSITION
1	CHECK ALL TOOLING IS CORRECT AND RELEASED		
2	EPC300-C245T-HS-3K-42-1250	0/90	1 PLY, ALL OVER
3	EPC300-C245T-HS-3K-42-1250	45	1 PLY, ALL OVER
4	FILM BOND ADHESIVE	-	1 PLY, ALL OVER
5	ROHACELL CORE AND INSERTS	-	-
6	FILM BOND ADHESIVE	-	1 PLY, ALL OVER
7	EPC300-C245T-HS-3K-42-1250	-	PATCH PLY
8	EPC300-C245T-HS-3K-42-1250	0/90	1 PLY, ALL OVER
9	PEEL PLY	-	-
CURE	VACUUM BAG AND CURE. RAMP TO 80C, HOLD FOR 30MIN, RAMP TO 120C, HOLD FOR 120MIN, RAMP DOWN		

UBRacing

A4

IF IN DOUBT - ASK

DO NOT SCALE

TEL. +44 (0)121 414 4218

E-MAIL. ubracing@gmail.com

MATERIAL CERTIFICATE REQUIRED

DIMENSIONS IN MILIMETRES U.O.S

0 DECIMAL PLACES	±0.50
1 DECIMAL PLACE	±0.25
2 DECIMAL PLACES	±0.10
3 DECIMAL PLACES	±0.02
GENERAL CONCENTRICITY	0.1 TIR
ANGULAR TOLERANCE	±0.25°

REMOVE BURRS AND SHARP EDGES

This drawing and the copyright herein are the property of UBRacing. It is private & confidential and is issued on the express condition that it is not modified, copied or communicated to any other party without the written consent of UBRacing.

COMPONENT MASS (kg): 0.000

DRAWN BY: RGA

SCALE: 1:1

MATERIAL SPEC: COMPOSITE

HEAT TREATMENT: N/A

SURFACE TREATMENT: N/A

DESCRIPTION: FRONT WING THIRD ELEMENT ENDPLATE

SHEET 1/1

PART NUMBER: UBR28_AE_N_132_01A

REV	DESCRIPTION	INIT	DATE
01A	INITIAL RELEASE	RGA	3/6/25

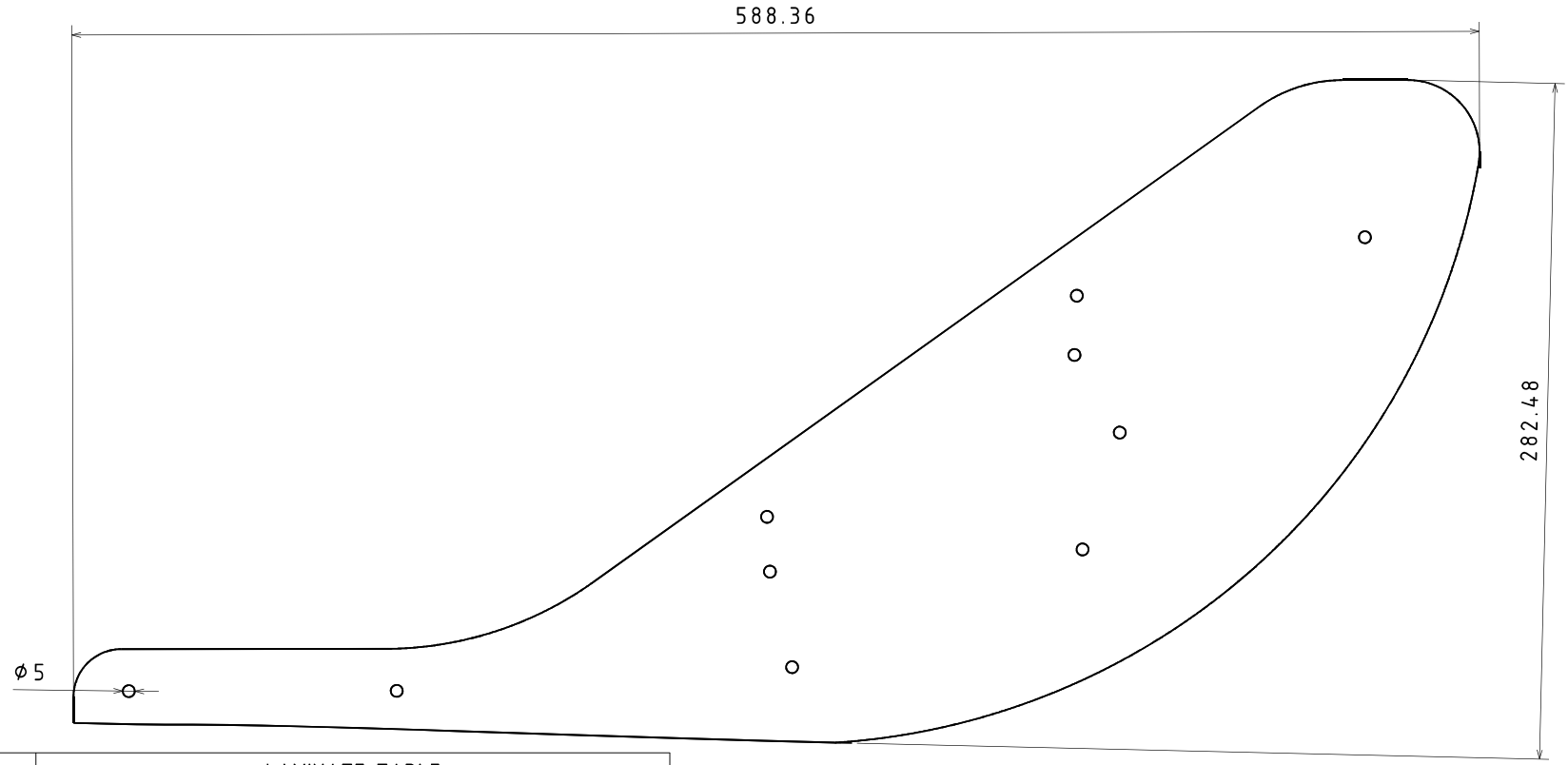

	LAMINATE TABLE		
OP NO.	MATERIAL SPEC	ORIENTATION	POSITION
1	CHECK ALL TOOLING IS CORRECT AND RELEASED		
2	EPC300-C245T-HS-3K-42-1250	0/90	1 PLY, ALL OVER
3	EPC300-C245T-HS-3K-42-1250	45	1 PLY, ALL OVER
4	FILM BOND ADHESIVE	-	1 PLY, ALL OVER
5	ROHACELL CORE AND INSERTS	-	-
6	FILM BOND ADHESIVE	-	1 PLY, ALL OVER
7	EPC300-C245T-HS-3K-42-1250	-	PATCH PLY
8	EPC300-C245T-HS-3K-42-1250	45	1 PLY, ALL OVER
9	EPC300-C245T-HS-3K-42-1250	0/90	1 PLY, ALL OVER
10	PEEL PLY	-	-
CURE	VACUUM BAG AND CURE. RAMP TO 80C, HOLD FOR 30MIN, RAMP TO 120C, HOLD FOR 120MIN, RAMP DOWN		

UBRacing

A3

IF IN DOUBT - ASK

DO NOT SCALE

TEL. +44 (0)121 414 4218

E-MAIL. ubracing@gmail.com

MATERIAL CERTIFICATE REQUIRED

DIMENSIONS IN MILIMETRES U.O.S

0 DECIMAL PLACES	±0.50
1 DECIMAL PLACE	±0.25
2 DECIMAL PLACES	±0.10
3 DECIMAL PLACES	±0.02
GENERAL CONCENTRICITY	0.1 TIR
ANGULAR TOLERANCE	±0.25°

REMOVE BURRS AND SHARP EDGES

This drawing and the copyright herein are the property of UBRacing. It is private & confidential and is issued on the express condition that it is not modified,copied or communicated to any other party without the written consent of UBRacing.

COMPONENT MASS (kg)	0.000
DRAWN BY	RGA
SCALE	1:2
MATERIAL SPEC	COMPOSITE
HEAT TREATMENT	N/A
SURFACE TREATMENT	N/A
DESCRIPTION	FRONT WING CENTERPLATE
SHEET	1/1
PART NUMBER	UBR28_AE_N_141_01A

REV	DESCRIPTION	INIT	DATE
01A	INITIAL RELEASE	RGA	3/6/25

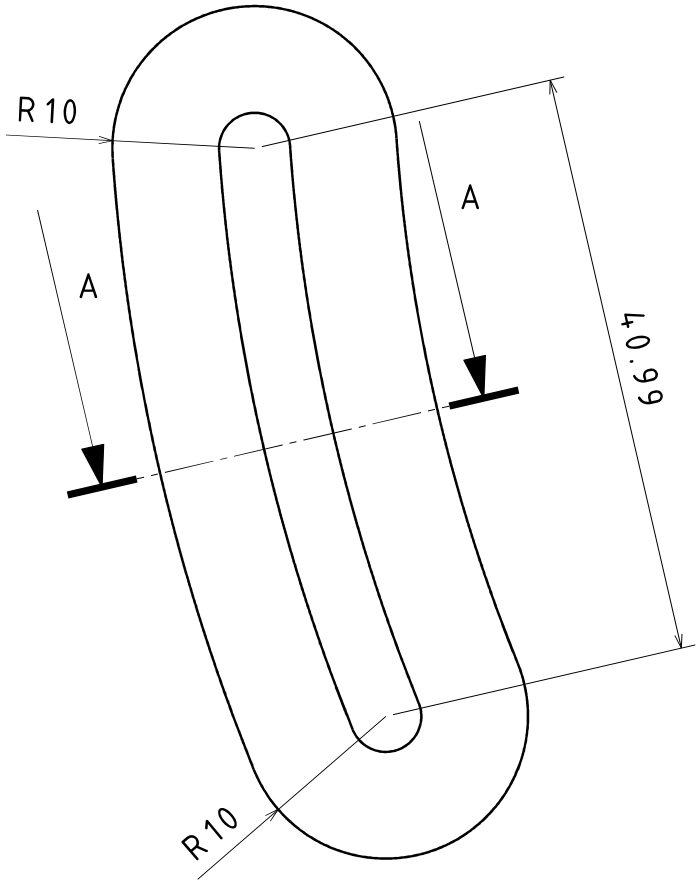

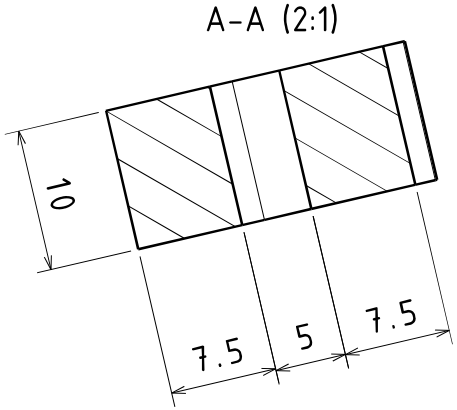

UBRacing	MATERIAL CERTIFICATE REQUIRED DIMENSIONS IN MILIMETRES U.O.S	COMPONENT MASS (kg)	0.000	MATERIAL SPEC	10MM PLYWOOD
				HEAT TREATMENT	N/A
A4	IF IN DOUBT - ASK DO NOT SCALE	DRAWN BY	RGA	SURFACE TREATMENT	N/A
	0 DECIMAL PLACES ±0.50 1 DECIMAL PLACE ±0.25 2 DECIMAL PLACES ±0.10 3 DECIMAL PLACES ±0.02 GENERAL CONCENTRICITY 0.1 TIR ANGULAR TOLERANCE ±0.25°			DESCRIPTION	CENTERPLATE TO SECOND ELEMENT LOWER INSERT
TEL.	+44 (0)121 414 4218				
E-MAIL.	ubracing@gmail.com				
	REMOVE BURRS AND SHARP EDGES				
		SCALE	2:1	SHEET 1/1	PART NUMBER UBR28_AE_N_147_01A

This drawing and the copyright herein are the property of UBRacing. It is private & confidential and is issued on the express condition that it is not modified, copied or communicated to any other party without the written consent of UBRacing.

REV	DESCRIPTION	INIT	DATE
01A	INITIAL RELEASE	RGA	3/6/25

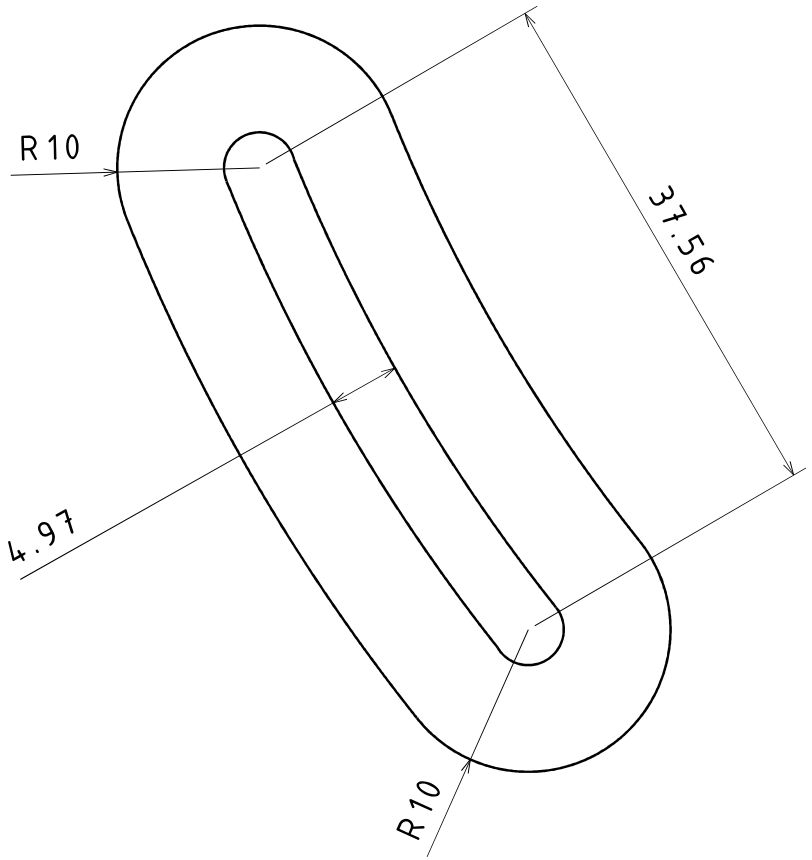

UBRacing

A4

IF IN DOUBT - ASK

DO NOT SCALE

TEL. +44 (0)121 414 4218

E-MAIL. ubracing@gmail.com

MATERIAL CERTIFICATE REQUIRED

DIMENSIONS IN MILIMETRES U.O.S

0 DECIMAL PLACES	±0.50
1 DECIMAL PLACE	±0.25
2 DECIMAL PLACES	±0.10
3 DECIMAL PLACES	±0.02
GENERAL CONCENTRICITY	0.1 TIR
ANGULAR TOLERANCE	±0.25°

REMOVE BURRS AND SHARP EDGES

This drawing and the copyright herein are the property of UBRacing. It is private & confidential and is issued on the express condition that it is not modified, copied or communicated to any other party without the written consent of UBRacing.

COMPONENT MASS (kg): 0.000

DRAWN BY: RGA

SCALE: 2:1

MATERIAL SPEC: 10MM PLYWOOD

HEAT TREATMENT: N/A

SURFACE TREATMENT: N/A

DESCRIPTION: CENTERPLATE TO THIRD ELEMENT

SHEET 1/1

PART NUMBER: UBR28_AE_N_148_01A

REV	DESCRIPTION	INIT	DATE
01A	INITIAL RELEASE	RGA	3/6/25

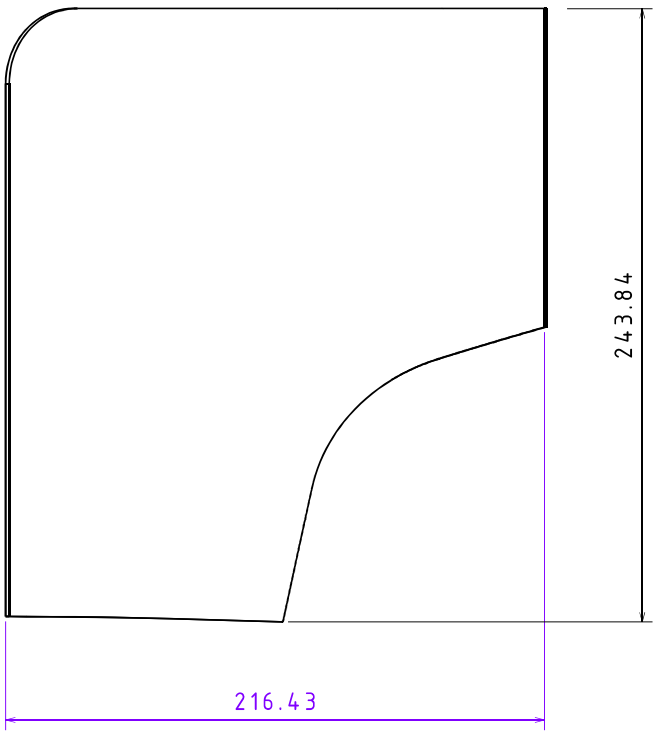

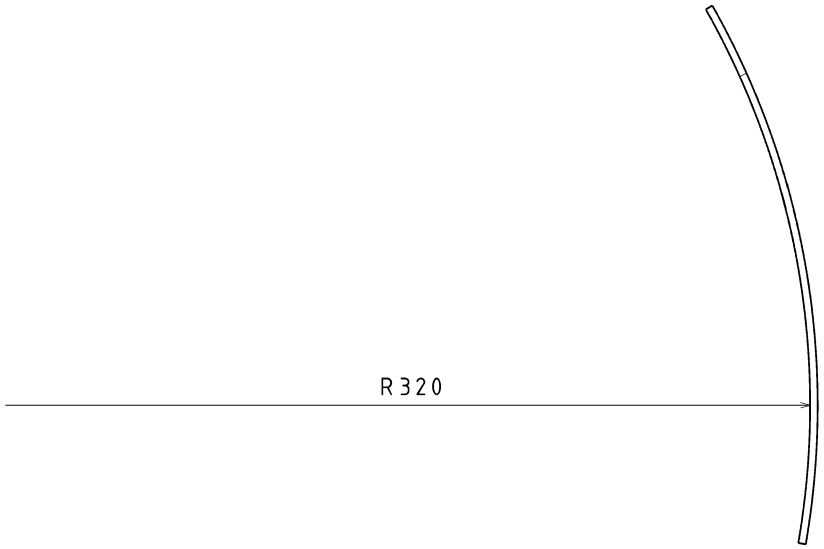

	LAMINATE TABLE		
OP NO.	MATERIAL SPEC	ORIENTATION	POSITION
1	CHECK ALL TOOLING IS CORRECT AND RELEASED		
2	EPC300-C245T-HS-3K-42-1250	0/90	1 PLY, ALL OVER
3	EPC300-C245T-HS-3K-42-1250	45	1 PLY, ALL OVER
4	FILM BOND ADHESIVE	-	1 PLY, ALL OVER
5	3MM NOMEX CORE	-	-
6	FILM BOND ADHESIVE	-	1 PLY, ALL OVER
7	EPC300-C245T-HS-3K-42-1250	45	1 PLY, ALL OVER
8	EPC300-C245T-HS-3K-42-1250	0/90	1 PLY, ALL OVER
9	PEEL PLY	-	-
CURE	VACUUM BAG AND CURE. RAMP TO 80C, HOLD FOR 30MIN, RAMP TO 120C, HOLD FOR 120MIN, RAMP DOWN		

UBRacing

A3

IF IN DOUBT - ASK

DO NOT SCALE

TEL. +44 (0)121 414 4218

E-MAIL. ubracing@gmail.com

MATERIAL CERTIFICATE REQUIRED

DIMENSIONS IN MILIMETRES U.O.S

0 DECIMAL PLACES	±0.50
1 DECIMAL PLACE	±0.25
2 DECIMAL PLACES	±0.10
3 DECIMAL PLACES	±0.02
GENERAL CONCENTRICITY	0.1 TIR
ANGULAR TOLERANCE	±0.25°

REMOVE BURRS AND SHARP EDGES

This drawing and the copyright herein are the property of UBRacing. It is private & confidential and is issued on the express condition that it is not modified,copied or communicated to any other party without the written consent of UBRacing.

COMPONENT MASS (kg): 0.000

DRAWN BY: RGA

SCALE: 1:2

MATERIAL SPEC: COMPOSITE

HEAT TREATMENT: N/A

SURFACE TREATMENT: N/A

DESCRIPTION: VORTEX GENERATOR

SHEET: 1/1

PART NUMBER: UBR28_AE_N_161_01A

REV	DESCRIPTION	INIT	DATE
01A	INITIAL RELEASE	RGA	3/6/25

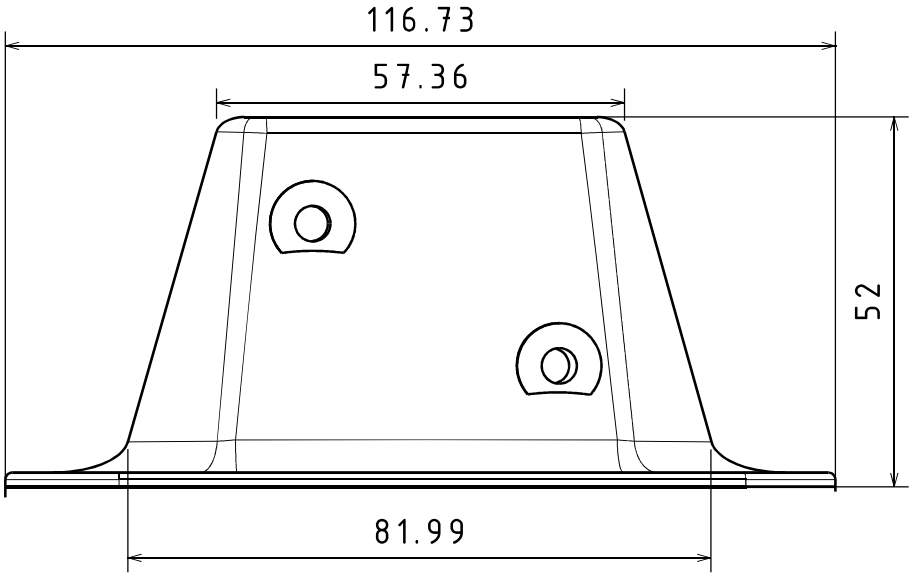

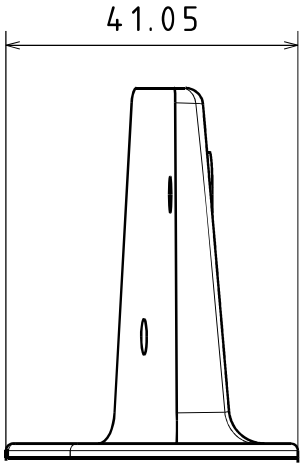

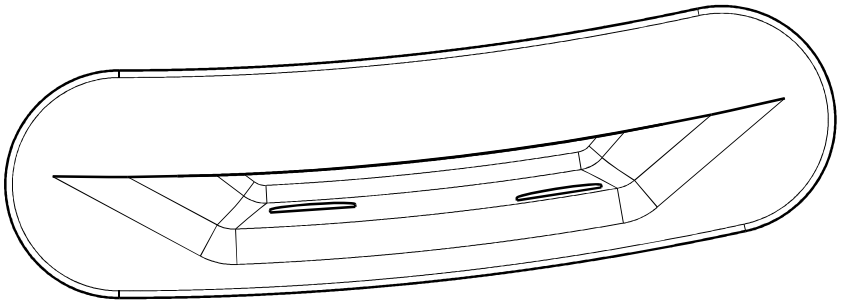

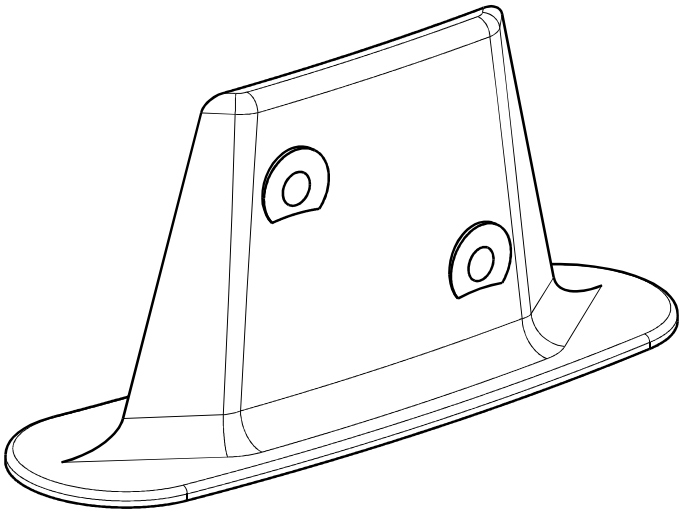

UBRacing	MATERIAL CERTIFICATE REQUIRED DIMENSIONS IN MILIMETRES U.O.S	COMPONENT MASS (kg)	0.000	MATERIAL SPEC	CARBON-NYLON
				HEAT TREATMENT	N/A
A4	IF IN DOUBT - ASK DO NOT SCALE	DRAWN BY	RGA	SURFACE TREATMENT	N/A
	0 DECIMAL PLACES ±0.50 1 DECIMAL PLACE ±0.25 2 DECIMAL PLACES ±0.10 3 DECIMAL PLACES ±0.02 GENERAL CONCENTRICITY 0.1 TIR ANGULAR TOLERANCE ±0.25°			DESCRIPTION	VORTEX GENERATOR BRACKET
TEL.	+44 (0)121 414 4218				
E-MAIL.	ubracing@gmail.com				
	REMOVE BURRS AND SHARP EDGES				
	This drawing and the copyright herein are the property of UBRacing. It is private & confidential and is issued on the express condition that it is not modified, copied or communicated to any other party without the written consent of UBRacing.	SCALE	1:1	SHEET 1/1	PART NUMBER UBR28_AE_N_162_01A

REV	DESCRIPTION	INIT	DATE
01A	INITIAL RELEASE	RGA	3/6/25

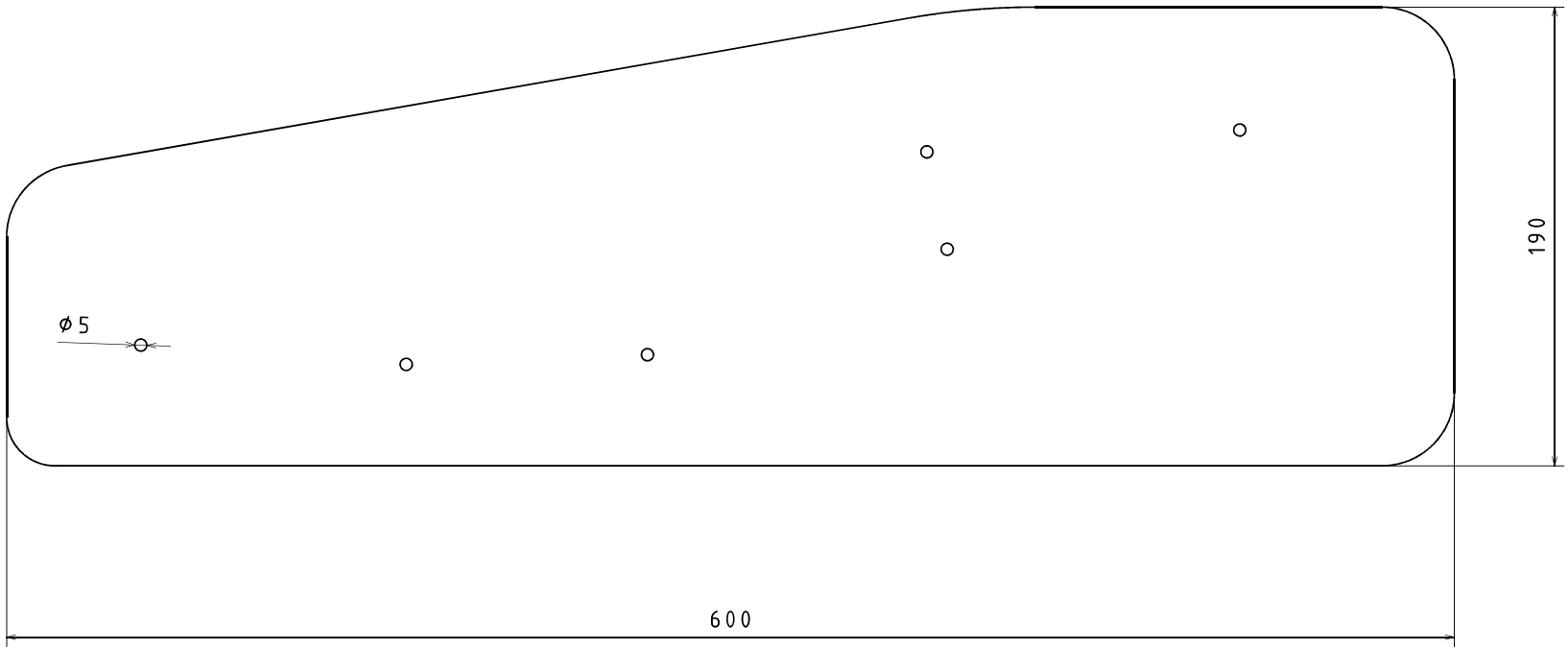

	LAMINATE TABLE		
OP NO.	MATERIAL SPEC	ORIENTATION	POSITION
1	CHECK ALL TOOLING IS CORRECT AND RELEASED		
2	EPC300-C245T-HS-3K-42-1250	0/90	1 PLY, ALL OVER
3	EPC300-C245T-HS-3K-42-1250	45	1 PLY, ALL OVER
4	FILM BOND ADHESIVE	-	1 PLY, ALL OVER
5	ROHACELL CORE AND INSERTS	-	-
6	FILM BOND ADHESIVE	-	1 PLY, ALL OVER
7	EPC300-C245T-HS-3K-42-1250	-	PATCH PLY
8	EPC300-C245T-HS-3K-42-1250	45	1 PLY, ALL OVER
9	EPC300-C245T-HS-3K-42-1250	0/90	1 PLY, ALL OVER
10	PEEL PLY	-	-
CURE	VACUUM BAG AND CURE. RAMP TO 80C, HOLD FOR 30MIN, RAMP TO 120C, HOLD FOR 120MIN, RAMP DOWN		

UBRacing

A3

IF IN DOUBT - ASK

DO NOT SCALE

TEL. +44 (0)121 414 4218

E-MAIL. ubracing@gmail.com

MATERIAL CERTIFICATE REQUIRED

DIMENSIONS IN MILIMETRES U.O.S

0 DECIMAL PLACES	±0.50
1 DECIMAL PLACE	±0.25
2 DECIMAL PLACES	±0.10
3 DECIMAL PLACES	±0.02
GENERAL CONCENTRICITY	0.1 TIR
ANGULAR TOLERANCE	±0.25°

REMOVE BURRS AND SHARP EDGES

This drawing and the copyright herein are the property of UBRacing. It is private & confidential and is issued on the express condition that it is not modified,copied or communicated to any other party without the written consent of UBRacing.

COMPONENT MASS (kg): 0.000

DRAWN BY: RGA

SCALE: 1:2

MATERIAL SPEC: COMPOSITE

HEAT TREATMENT: N/A

SURFACE TREATMENT: N/A

DESCRIPTION: FRONT WING ENDPLATE

SHEET: 1/1

PART NUMBER: UBR28_AE_N_171_01A

REV	DESCRIPTION	INIT	DATE
01A	INITIAL RELEASE	RGA	3/6/25

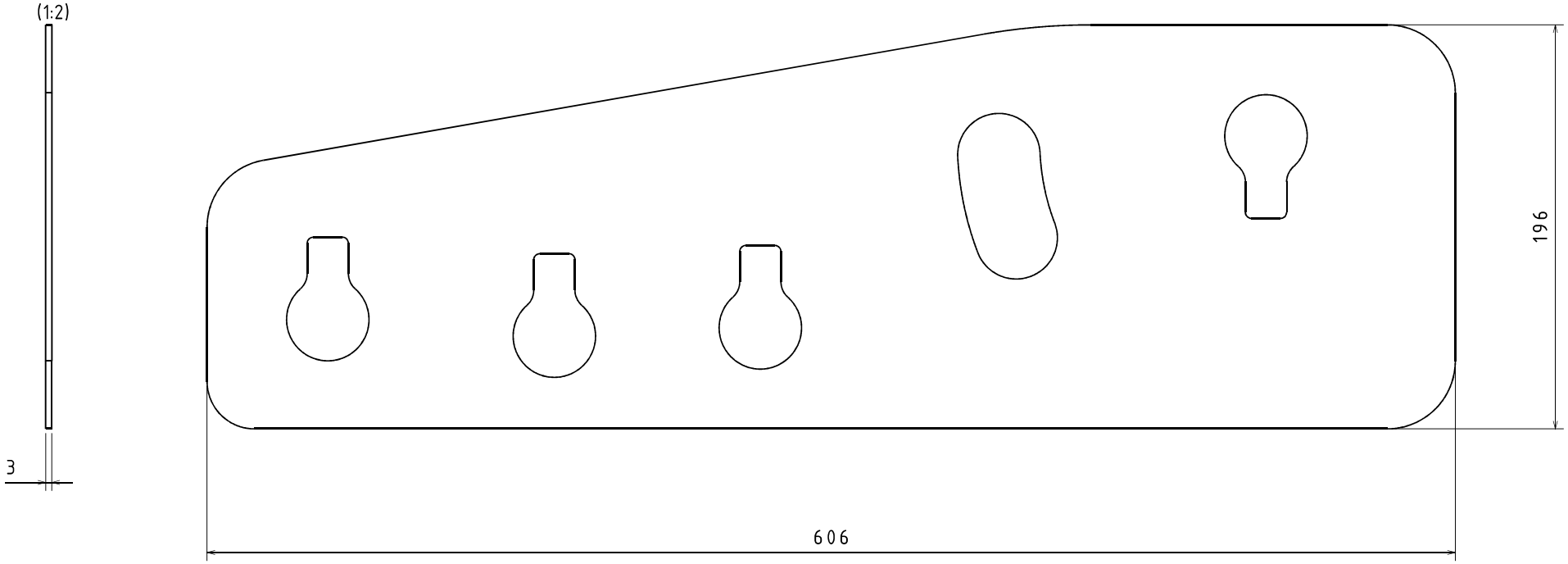

UBRacing

A3

IF IN DOUBT - ASK

DO NOT SCALE

TEL. +44 (0)121 414 4218

E-MAIL. ubracing@gmail.com

MATERIAL CERTIFICATE REQUIRED

DIMENSIONS IN MILIMETRES U.O.S

0 DECIMAL PLACES	±0.50
1 DECIMAL PLACE	±0.25
2 DECIMAL PLACES	±0.10
3 DECIMAL PLACES	±0.02
GENERAL CONCENTRICITY	0.1 TIR
ANGULAR TOLERANCE	±0.25°

REMOVE BURRS AND SHARP EDGES

This drawing and the copyright herein are the property of UBRacing. It is private & confidential and is issued on the express condition that it is not modified,copied or communicated to any other party without the written consent of UBRacing.

COMPONENT MASS (kg): 0.000

DRAWN BY: RGA

SCALE: 1:2

MATERIAL SPEC	ROHACELL IG-F 31
HEAT TREATMENT	N/A
SURFACE TREATMENT	N/A

DESCRIPTION

FRONT WING ENDPLATE
ROHACELL CORE

SHEET 1/1

PART NUMBER UBR28_AE_N_172_01A

REV	DESCRIPTION	INIT	DATE
01A	INITIAL RELEASE	RGA	3/6/25

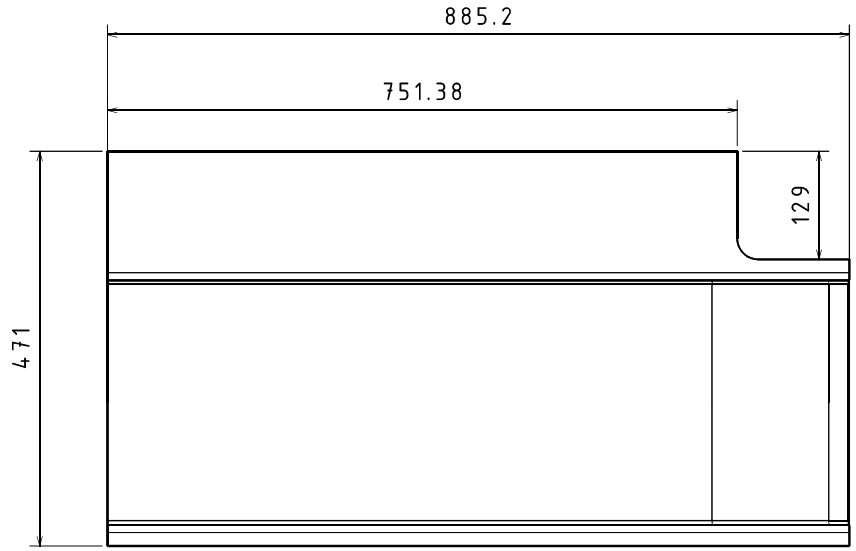

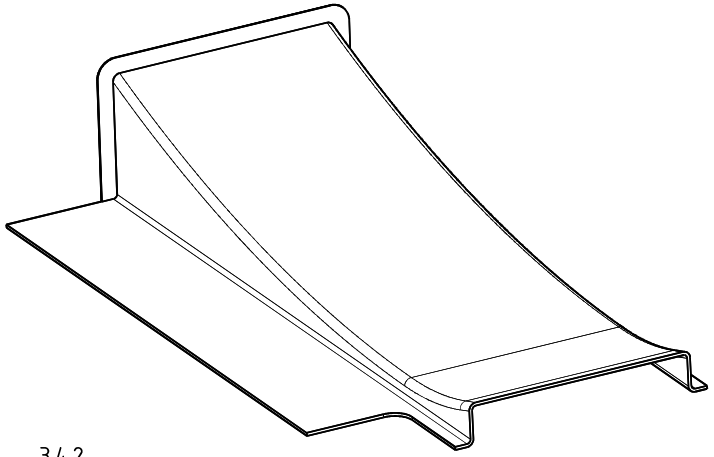

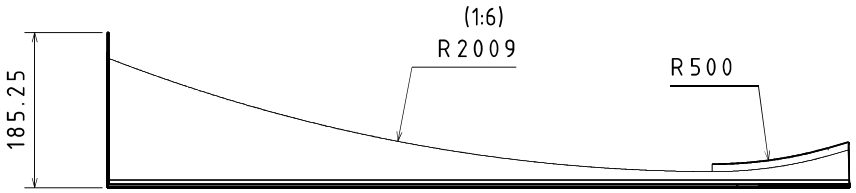

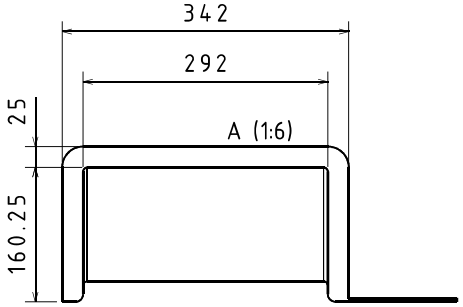

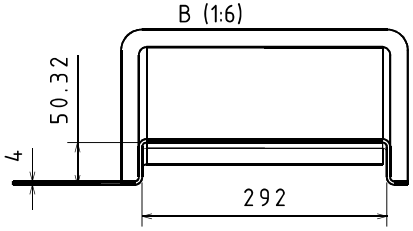

	LAMINATE TABLE		
OP NO.	MATERIAL SPEC	ORIENTATION	POSITION
1	CHECK ALL TOOLING IS CORRECT AND RELEASED		
2	EPC300-C245T-HS-3K-42-1250	0/90	1 PLY, ALL OVER
3	EPC300-C245T-HS-3K-42-1250	45	1 PLY, ALL OVER
4	FILM BOND ADHESIVE	-	1 PLY, ALL OVER
5	ROHACELL/NOMEX CORE AND INSERTS	-	-
6	FILM BOND ADHESIVE	-	1 PLY, ALL OVER
7	EPC300-C245T-HS-3K-42-1250	-	PATCH PLY
8	EPC300-C245T-HS-3K-42-1250	45	1 PLY, ALL OVER
9	EPC300-C245T-HS-3K-42-1250	0/90	1 PLY, ALL OVER
10	PEEL PLY	-	-
CURE	VACUUM BAG AND CURE. RAMP TO 80C, HOLD FOR 30MIN, RAMP TO 120C, HOLD FOR 120MIN, RAMP DOWN		

UBRacing

A3

IF IN DOUBT - ASK

DO NOT SCALE

TEL. +44 (0)121 414 4218

E-MAIL. ubracing@gmail.com

MATERIAL CERTIFICATE REQUIRED

DIMENSIONS IN MILIMETRES U.O.S

0 DECIMAL PLACES	±0.50
1 DECIMAL PLACE	±0.25
2 DECIMAL PLACES	±0.10
3 DECIMAL PLACES	±0.02
GENERAL CONCENTRICITY	0.1 TIR
ANGULAR TOLERANCE	±0.25°

REMOVE BURRS AND SHARP EDGES

This drawing and the copyright herein are the property of UBRacing. It is private & confidential and is issued on the express condition that it is not modified,copied or communicated to any other party without the written consent of UBRacing.

COMPONENT MASS (kg): 0.000

DRAWN BY: RGA

SCALE: 1:6

MATERIAL SPEC: COMPOSITE

HEAT TREATMENT: N/A

SURFACE TREATMENT: N/A

DESCRIPTION: SIDE DIFFUSER

SHEET 1/1

PART NUMBER: UBR28_AE_N_211_01A

REV	DESCRIPTION	INIT	DATE
01A	INITIAL RELEASE	RGA	3/6/25

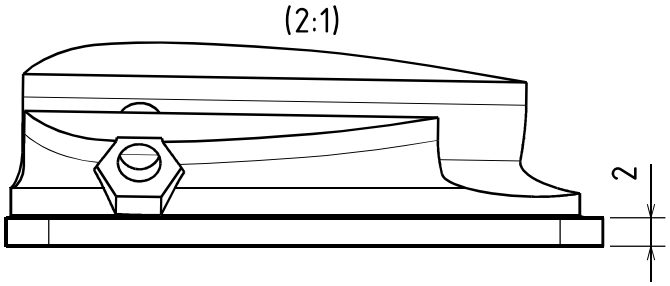

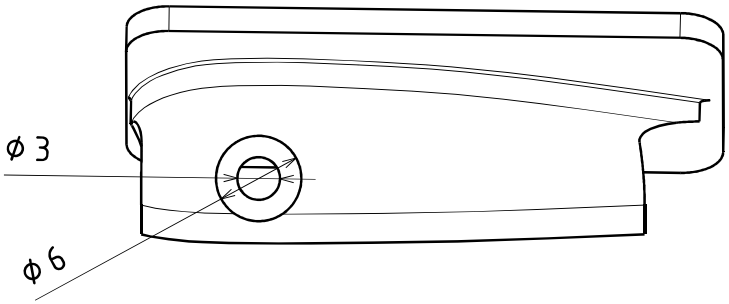

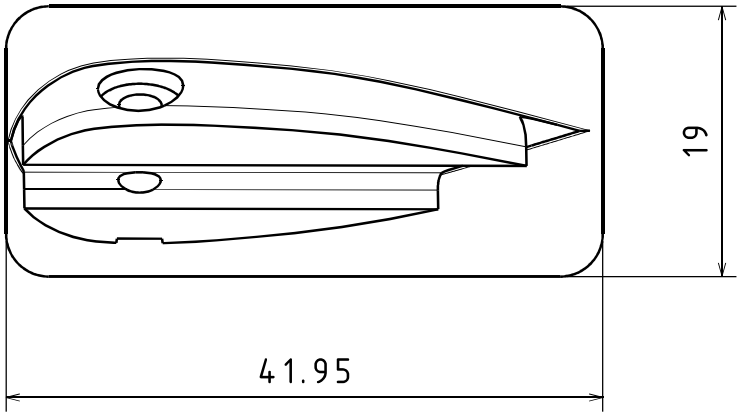

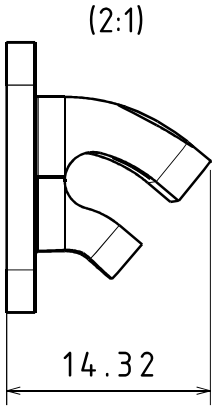

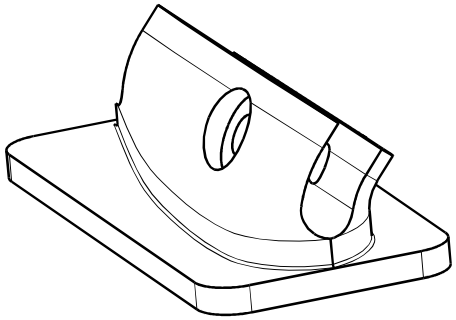

UBRacing	MATERIAL CERTIFICATE REQUIRED DIMENSIONS IN MILIMETRES U.O.S	COMPONENT MASS (kg)	0.000	MATERIAL SPEC	CARBON NYLON
				HEAT TREATMENT	N/A
A4	IF IN DOUBT - ASK DO NOT SCALE	DRAWN BY	RGA	SURFACE TREATMENT	N/A
	0 DECIMAL PLACES ±0.50 1 DECIMAL PLACE ±0.25 2 DECIMAL PLACES ±0.10 3 DECIMAL PLACES ±0.02 GENERAL CONCENTRICITY 0.1 TIR ANGULAR TOLERANCE ±0.25°			DESCRIPTION	SIDE DIFFUSER SUPPORT MOUNT P1
TEL.	+44 (0)121 414 4218				
E-MAIL.	ubracing@gmail.com				
	REMOVE BURRS AND SHARP EDGES				
	This drawing and the copyright herein are the property of UBRacing. It is private & confidential and is issued on the express condition that it is not modified, copied or communicated to any other party without the written consent of UBRacing.	SCALE	2:1	SHEET 1/1	PART NUMBER UBR28_AE_N_291_01A

REV	DESCRIPTION	INIT	DATE
01A	INITIAL RELEASE	RGA	3/6/25

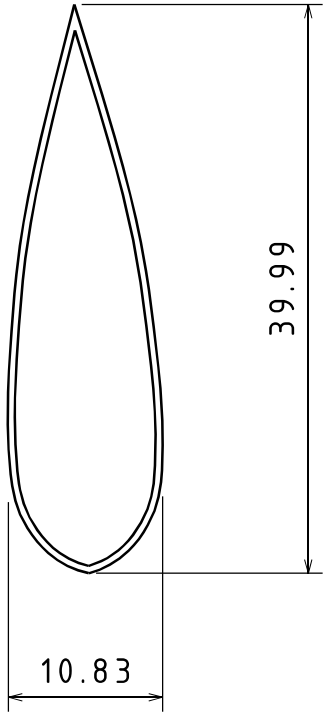

	LAMINATE TABLE		
OP NO.	MATERIAL SPEC	ORIENTATION	POSITION
1	CHECK ALL TOOLING IS CORRECT AND RELEASED		
2	EPC300-C245T-HS-3K-42-1250	45	1 PLY, ALL OVER
3	EPC300-C245T-HS-3K-42-1250	0/90	1 PLY, ALL OVER
CURE	VACUUM BAG AND CURE. RAMP TO 80C, HOLD FOR 30MIN, RAMP TO 120C, HOLD FOR 120MIN, RAMP DOWN		

UBRacing

A4

IF IN DOUBT - ASK

DO NOT SCALE

TEL. +44 (0)121 414 4218

E-MAIL. ubracing@gmail.com

MATERIAL CERTIFICATE REQUIRED

DIMENSIONS IN MILIMETRES U.O.S

0 DECIMAL PLACES	±0.50
1 DECIMAL PLACE	±0.25
2 DECIMAL PLACES	±0.10
3 DECIMAL PLACES	±0.02
GENERAL CONCENTRICITY	0.1 TIR
ANGULAR TOLERANCE	±0.25°

REMOVE BURRS AND SHARP EDGES

This drawing and the copyright herein are the property of UBRacing. It is private & confidential and is issued on the express condition that it is not modified, copied or communicated to any other party without the written consent of UBRacing.

COMPONENT MASS (kg): 0.000

DRAWN BY: RGA

SCALE: 2:1

MATERIAL SPEC: COMPOSITE

HEAT TREATMENT: N/A

SURFACE TREATMENT: N/A

DESCRIPTION: SIDE DIFFUSER SUPPORT

SHEET 1/1

PART NUMBER: UBR28_AE_N_292_01A

REV	DESCRIPTION	INIT	DATE
01A	INITIAL RELEASE	RGA	3/6/25

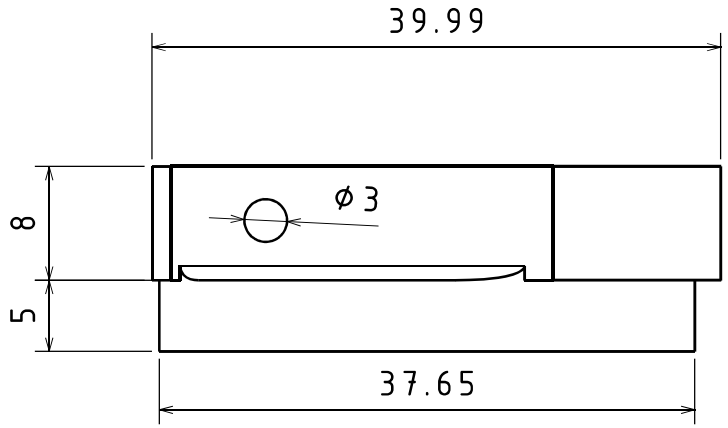

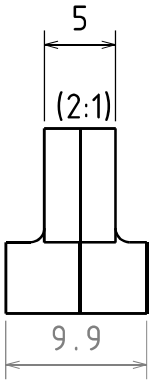

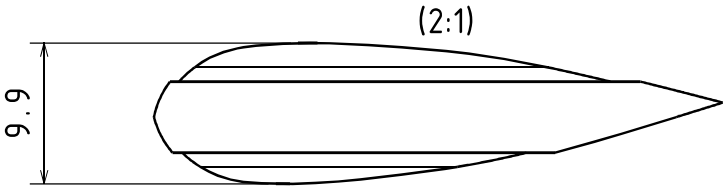

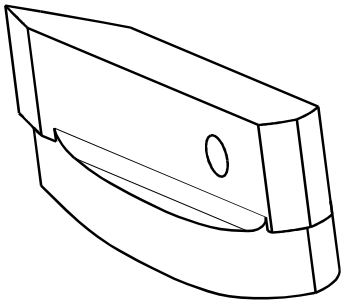

UBRacing	MATERIAL CERTIFICATE REQUIRED DIMENSIONS IN MILIMETRES U.O.S	COMPONENT MASS (kg)	0.000	MATERIAL SPEC	CARBON NYLON
				HEAT TREATMENT	N/A
A4	IF IN DOUBT - ASK DO NOT SCALE	DRAWN BY	RGA	SURFACE TREATMENT	N/A
	0 DECIMAL PLACES ±0.50 1 DECIMAL PLACE ±0.25 2 DECIMAL PLACES ±0.10 3 DECIMAL PLACES ±0.02 GENERAL CONCENTRICITY 0.1 TIR ANGULAR TOLERANCE ±0.25°			DESCRIPTION	SIDE DIFFUSER SUPPORT MOUNT P3
TEL.	+44 (0)121 414 4218				
E-MAIL.	ubracing@gmail.com				
	REMOVE BURRS AND SHARP EDGES				
		SCALE	2:1	SHEET 1/1	PART NUMBER UBR28_AE_N_293_01A

This drawing and the copyright herein are the property of UBRacing. It is private & confidential and is issued on the express condition that it is not modified, copied or communicated to any other party without the written consent of UBRacing.

REV	DESCRIPTION	INIT	DATE
01A	INITIAL RELEASE	RGA	3/6/25

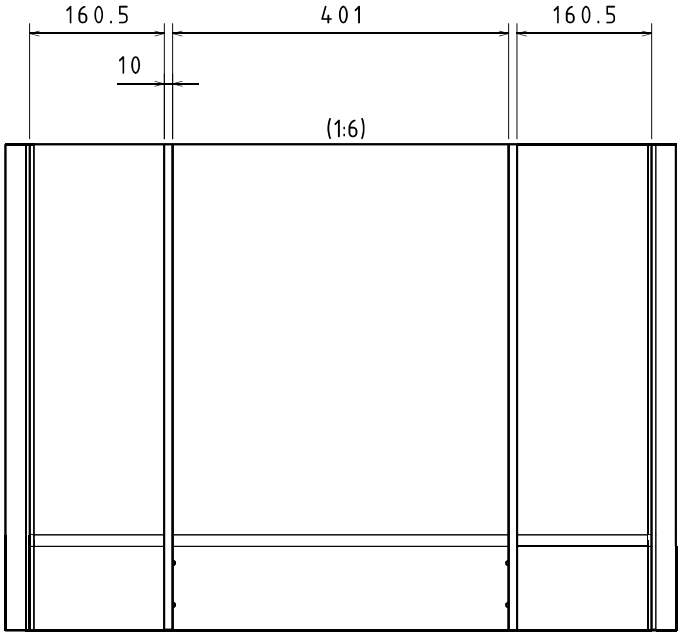

	LAMINATE TABLE		
OP NO.	MATERIAL SPEC	ORIENTATION	POSITION
1	CHECK ALL TOOLING IS CORRECT AND RELEASED		
2	EPC300-C245T-HS-3K-42-1250	0/90	1 PLY, ALL OVER
3	EPC300-C245T-HS-3K-42-1250	45	1 PLY, ALL OVER
4	FILM BOND ADHESIVE	-	1 PLY, ALL OVER
5	ROHACELL/NOMEX CORE AND INSERTS	-	-
6	FILM BOND ADHESIVE	-	1 PLY, ALL OVER
7	EPC300-C245T-HS-3K-42-1250	-	PATCH PLY
8	EPC300-C245T-HS-3K-42-1250	45	1 PLY, ALL OVER
9	EPC300-C245T-HS-3K-42-1250	0/90	1 PLY, ALL OVER
10	PEEL PLY	-	-
CURE	VACUUM BAG AND CURE. RAMP TO 80C, HOLD FOR 30MIN, RAMP TO 120C, HOLD FOR 120MIN, RAMP DOWN		

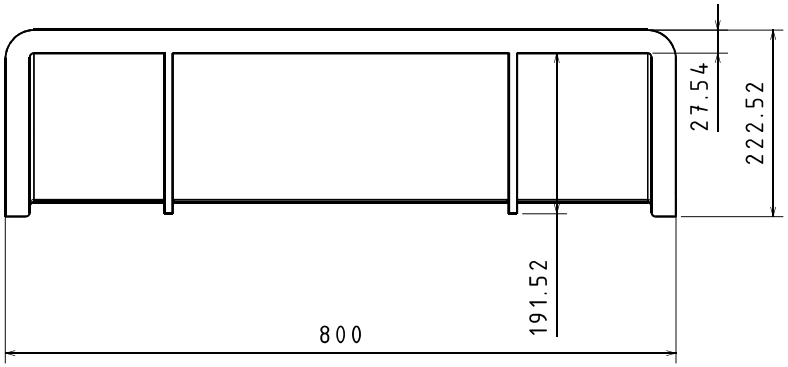

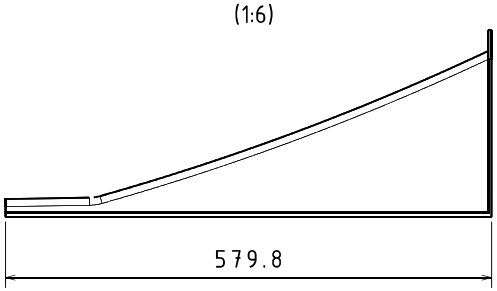

UBRacing

A3

IF IN DOUBT - ASK

DO NOT SCALE

TEL. +44 (0)121 414 4218

E-MAIL. ubracing@gmail.com

MATERIAL CERTIFICATE REQUIRED

DIMENSIONS IN MILIMETRES U.O.S

0 DECIMAL PLACES	±0.50
1 DECIMAL PLACE	±0.25
2 DECIMAL PLACES	±0.10
3 DECIMAL PLACES	±0.02
GENERAL CONCENTRICITY	0.1 TIR
ANGULAR TOLERANCE	±0.25°

REMOVE BURRS AND SHARP EDGES

This drawing and the copyright herein are the property of UBRacing. It is private & confidential and is issued on the express condition that it is not modified,copied or communicated to any other party without the written consent of UBRacing.

COMPONENT MASS (kg): 0.000

DRAWN BY: RGA

SCALE: 1:1

MATERIAL SPEC: COMPOSITE

HEAT TREATMENT: N/A

SURFACE TREATMENT: N/A

DESCRIPTION: REAR DIFFUSER

SHEET: 1/1

PART NUMBER: UBR28_AE_N_312_01A

REV	DESCRIPTION	INIT	DATE
01A	INITIAL RELEASE	RGA	3/6/25

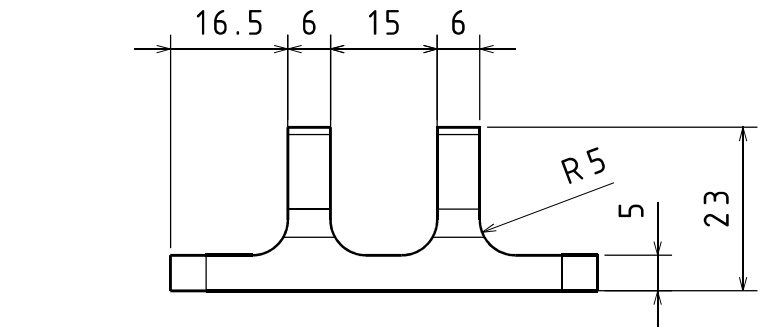

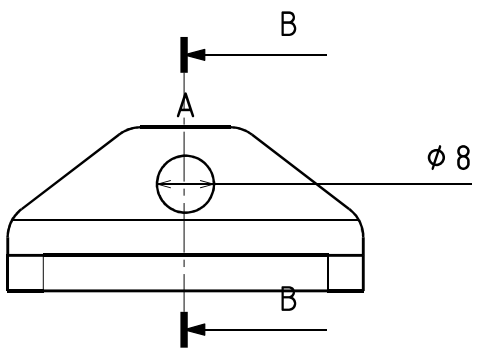

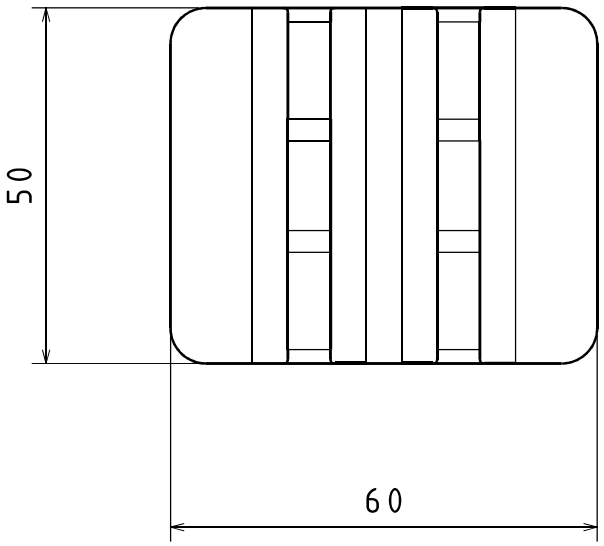

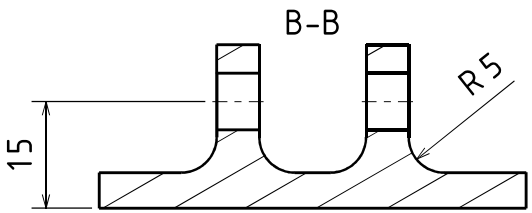

UBRacing	MATERIAL CERTIFICATE REQUIRED DIMENSIONS IN MILIMETRES U.O.S	COMPONENT MASS (kg)	0.000	MATERIAL SPEC	CARBON-NYLON
				HEAT TREATMENT	N/A
A4	IF IN DOUBT - ASK DO NOT SCALE	DRAWN BY	RGA	SURFACE TREATMENT	N/A
TEL.	+44 (0)121 414 4218			DESCRIPTION	REAR DIFFUSER SUPPORT CLEVIS
E-MAIL.	ubracing@gmail.com				
		SCALE	1:1	SHEET 1/1	PART NUMBER UBR28_AE_N_322_01A

0 DECIMAL PLACES	±0.50
1 DECIMAL PLACE	±0.25
2 DECIMAL PLACES	±0.10
3 DECIMAL PLACES	±0.02
GENERAL CONCENTRICITY	0.1 TIR
ANGULAR TOLERANCE	±0.25°

REMOVE BURRS AND SHARP EDGES

This drawing and the copyright herein are the property of UBRacing. It is private & confidential and is issued on the express condition that it is not modified, copied or communicated to any other party without the written consent of UBRacing.

REV	DESCRIPTION	INIT	DATE
01A	INITIAL RELEASE	RGA	3/6/25

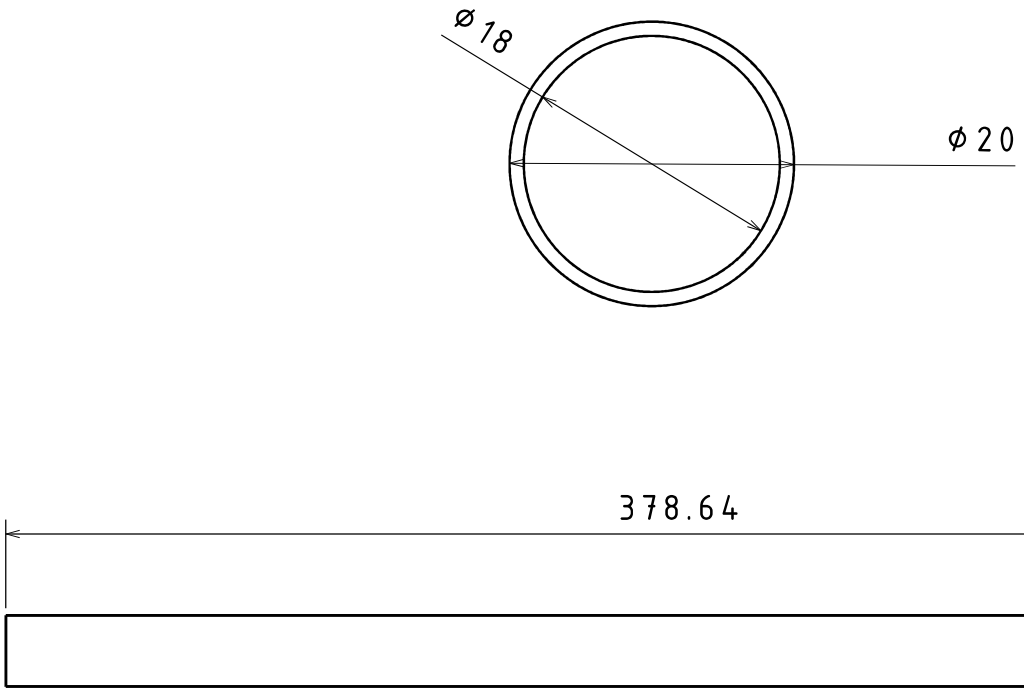

UBRacing

A4

IF IN DOUBT - ASK

DO NOT SCALE

TEL. +44 (0)121 414 4218

E-MAIL. ubracing@gmail.com

MATERIAL CERTIFICATE REQUIRED

DIMENSIONS IN MILIMETRES U.O.S

0 DECIMAL PLACES	±0.50
1 DECIMAL PLACE	±0.25
2 DECIMAL PLACES	±0.10
3 DECIMAL PLACES	±0.02
GENERAL CONCENTRICITY	0.1 TIR
ANGULAR TOLERANCE	±0.25°

REMOVE BURRS AND SHARP EDGES

This drawing and the copyright herein are the property of UBRacing. It is private & confidential and is issued on the express condition that it is not modified, copied or communicated to any other party without the written consent of UBRacing.

COMPONENT MASS (kg): 0.000

DRAWN BY: RGA

SCALE: 2:1

MATERIAL SPEC: BOUGHT-IN COMPOSITE

HEAT TREATMENT: N/A

SURFACE TREATMENT: N/A

DESCRIPTION: REAR DIFFUSER SUPPORT TUBE

SHEET 1/1

PART NUMBER: UBR28_AE_N_323_01A

REV	DESCRIPTION	INIT	DATE
01A	INITIAL RELEASE	RGA	3/6/25

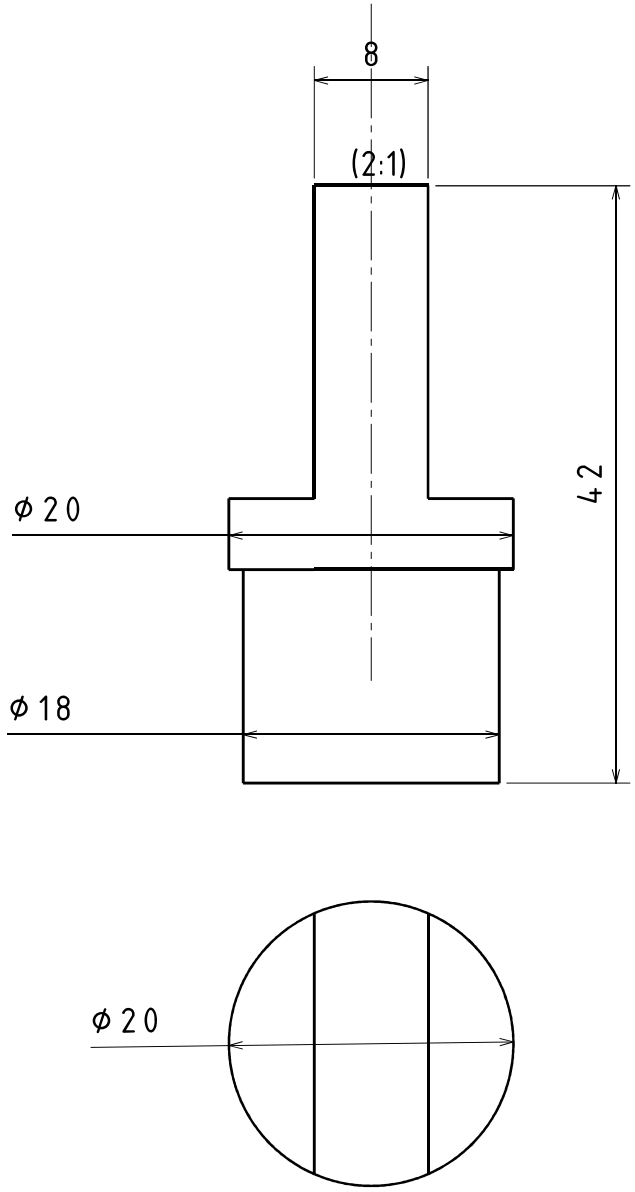

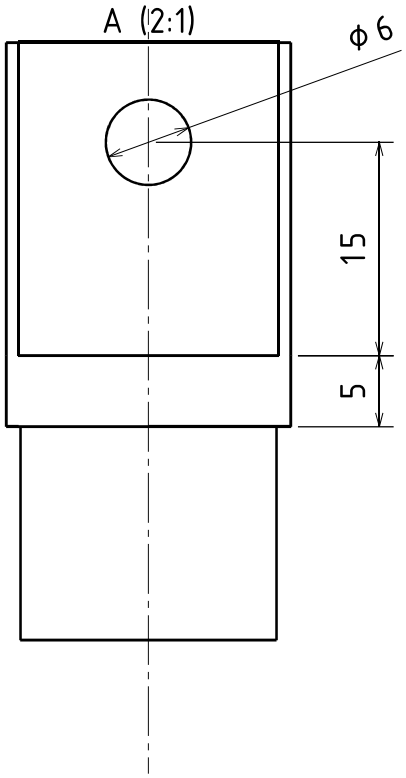

UBRacing

A4

IF IN DOUBT - ASK

DO NOT SCALE

TEL. +44 (0)121 414 4218

E-MAIL. ubracing@gmail.com

MATERIAL CERTIFICATE REQUIRED

DIMENSIONS IN MILIMETRES U.O.S

0 DECIMAL PLACES	±0.50
1 DECIMAL PLACE	±0.25
2 DECIMAL PLACES	±0.10
3 DECIMAL PLACES	±0.02
GENERAL CONCENTRICITY	0.1 TIR
ANGULAR TOLERANCE	±0.25°

REMOVE BURRS AND SHARP EDGES

This drawing and the copyright herein are the property of UBRacing. It is private & confidential and is issued on the express condition that it is not modified, copied or communicated to any other party without the written consent of UBRacing.

COMPONENT MASS (kg): 0.000

DRAWN BY: RGA

SCALE: 2:1

MATERIAL SPEC: 6061 ALUMINIUM

HEAT TREATMENT: N/A

SURFACE TREATMENT: N/A

DESCRIPTION: REAR DIFFUSER SUPPORT UPPER INSERT

SHEET 1/1

PART NUMBER: UBR28_AE_N_324_01A

REV	DESCRIPTION	INIT	DATE
01A	INITIAL RELEASE	RGA	3/6/25

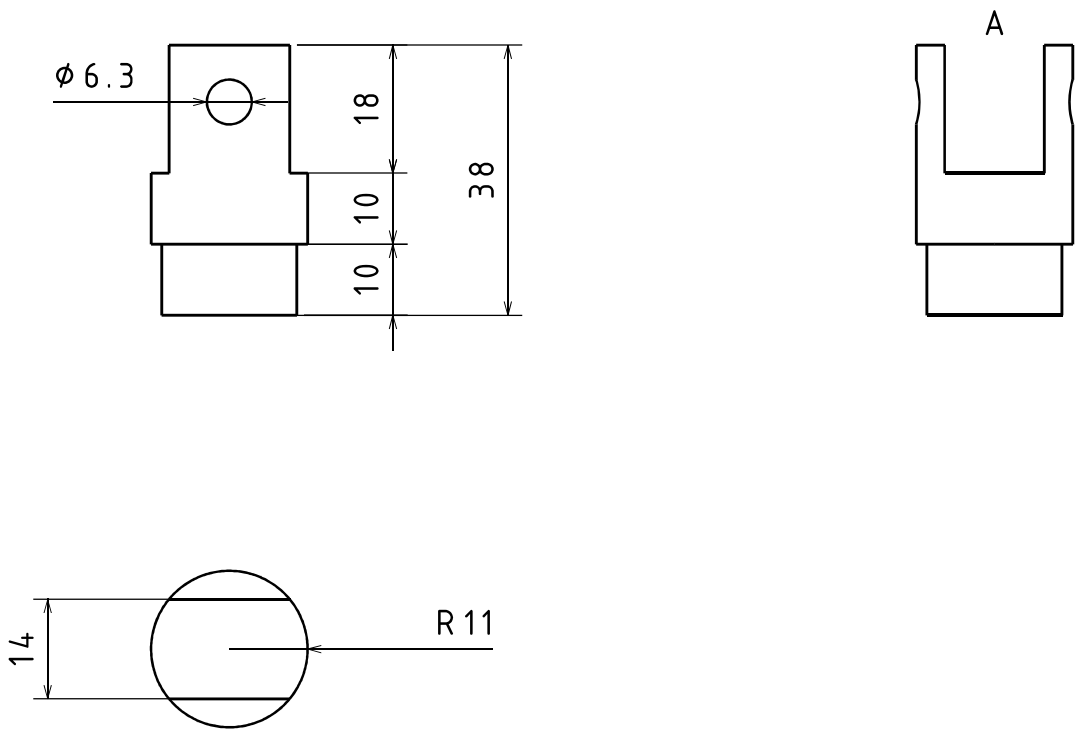

UBRacing

A4

IF IN DOUBT - ASK

DO NOT SCALE

TEL. +44 (0)121 414 4218

E-MAIL. ubracing@gmail.com

MATERIAL CERTIFICATE REQUIRED

DIMENSIONS IN MILIMETRES U.O.S

0 DECIMAL PLACES	±0.50
1 DECIMAL PLACE	±0.25
2 DECIMAL PLACES	±0.10
3 DECIMAL PLACES	±0.02
GENERAL CONCENTRICITY	0.1 TIR
ANGULAR TOLERANCE	±0.25°

REMOVE BURRS AND SHARP EDGES

This drawing and the copyright herein are the property of UBRacing. It is private & confidential and is issued on the express condition that it is not modified, copied or communicated to any other party without the written consent of UBRacing.

COMPONENT MASS (kg): 0.000

DRAWN BY: RGA

SCALE: 1:1

MATERIAL SPEC	6061 ALUMINIUM
HEAT TREATMENT	N/A
SURFACE TREATMENT	N/A
DESCRIPTION	REAR DIFFUSER STRUT LOWER INSERT
SHEET	1/1
PART NUMBER	UBR28_AE_N_325_01A

REV	DESCRIPTION	INIT	DATE
01A	INITIAL RELEASE	RGA	3/6/25

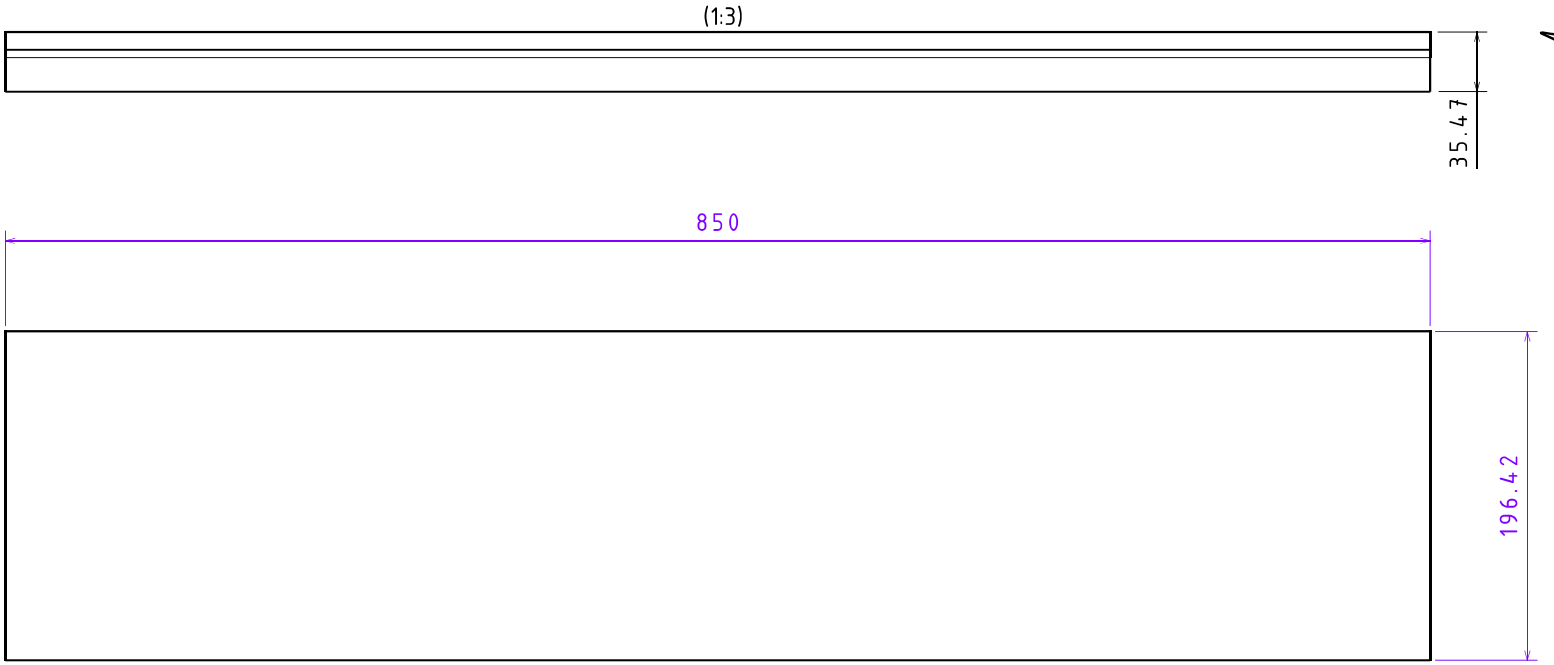

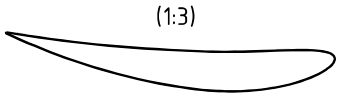

	LAMINATE TABLE		
OP NO.	MATERIAL SPEC	ORIENTATION	POSITION
1	CHECK ALL TOOLING IS CORRECT AND RELEASED		
2	EPC300-C245T-HS-3K-42-1250	45	1 PLY, ALL OVER
3	EPC300-C245T-HS-3K-42-1250	0/90	1 PLY, ALL OVER
4	MYLAR FILM	-	-
CURE	VACUUM BAG AND CURE. RAMP TO 80C, HOLD FOR 30MIN, RAMP TO 120C, HOLD FOR 120MIN, RAMP DOWN		

UBRacing

A3

IF IN DOUBT - ASK

DO NOT SCALE

TEL. +44 (0)121 414 4218

E-MAIL. ubracing@gmail.com

MATERIAL CERTIFICATE REQUIRED

DIMENSIONS IN MILIMETRES U.O.S

0 DECIMAL PLACES	±0.50
1 DECIMAL PLACE	±0.25
2 DECIMAL PLACES	±0.10
3 DECIMAL PLACES	±0.02
GENERAL CONCENTRICITY	0.1 TIR
ANGULAR TOLERANCE	±0.25°

REMOVE BURRS AND SHARP EDGES

This drawing and the copyright herein are the property of UBRacing. It is private & confidential and is issued on the express condition that it is not modified,copied or communicated to any other party without the written consent of UBRacing.

COMPONENT MASS (kg): 0.000

DRAWN BY: RGA

SCALE: 1:3

MATERIAL SPEC: CFRP

HEAT TREATMENT: N/A

SURFACE TREATMENT: N/A

DESCRIPTION: REAR WING SECOND ELEMENT

SHEET: 1/1

PART NUMBER: UBR28_AE_N_421_01A

REV	DESCRIPTION	INIT	DATE
01A	INITIAL RELEASE	RGA	3/6/25

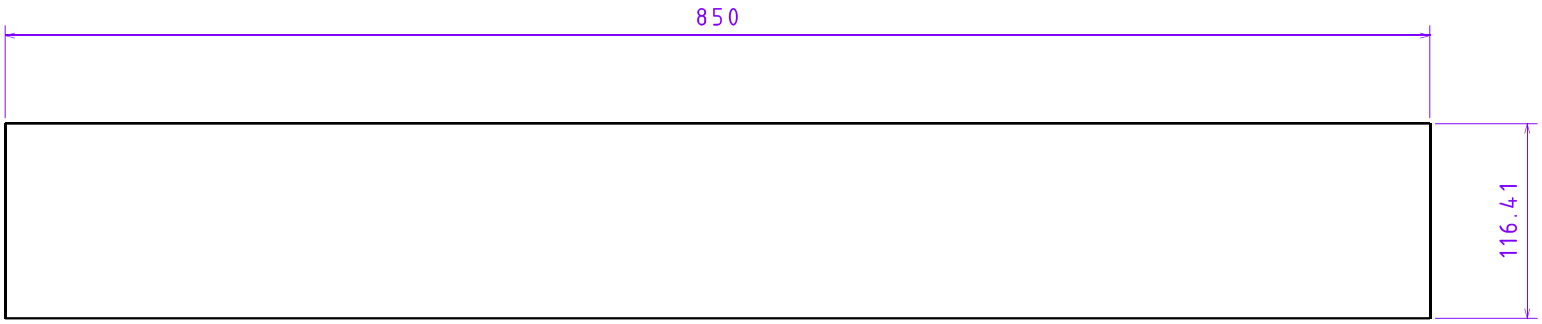

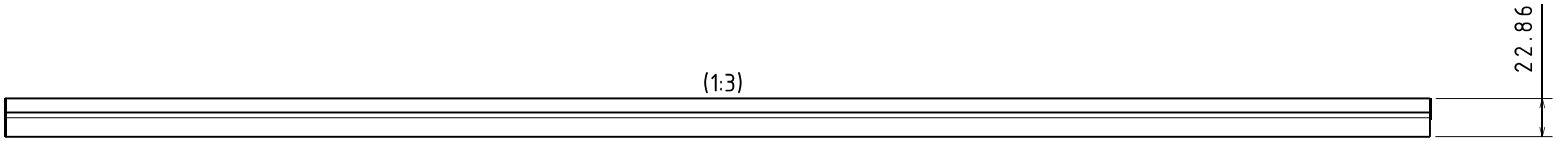

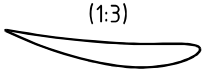

	LAMINATE TABLE		
OP NO.	MATERIAL SPEC	ORIENTATION	POSITION
1	CHECK ALL TOOLING IS CORRECT AND RELEASED		
2	EPC300-C245T-HS-3K-42-1250	45	1 PLY, ALL OVER
3	EPC300-C245T-HS-3K-42-1250	0/90	1 PLY, ALL OVER
4	MYLAR FILM	-	-
CURE	VACUUM BAG AND CURE. RAMP TO 80C, HOLD FOR 30MIN, RAMP TO 120C, HOLD FOR 120MIN, RAMP DOWN		

UBRacing

A3

IF IN DOUBT - ASK

DO NOT SCALE

TEL. +44 (0)121 414 4218

E-MAIL. ubracing@gmail.com

MATERIAL CERTIFICATE REQUIRED

DIMENSIONS IN MILIMETRES U.O.S

0 DECIMAL PLACES	±0.50
1 DECIMAL PLACE	±0.25
2 DECIMAL PLACES	±0.10
3 DECIMAL PLACES	±0.02
GENERAL CONCENTRICITY	0.1 TIR
ANGULAR TOLERANCE	±0.25°

REMOVE BURRS AND SHARP EDGES

This drawing and the copyright herein are the property of UBRacing. It is private & confidential and is issued on the express condition that it is not modified,copied or communicated to any other party without the written consent of UBRacing.

COMPONENT MASS (kg): 0.000

DRAWN BY: RGA

SCALE: 1:3

MATERIAL SPEC: CFRP

HEAT TREATMENT: N/A

SURFACE TREATMENT: N/A

DESCRIPTION: REAR WING THIRD ELEMENT

SHEET: 1/1

PART NUMBER: UBR28_AE_N_431_01A

REV	DESCRIPTION	INIT	DATE
01A	INITIAL RELEASE	RGA	3/6/25

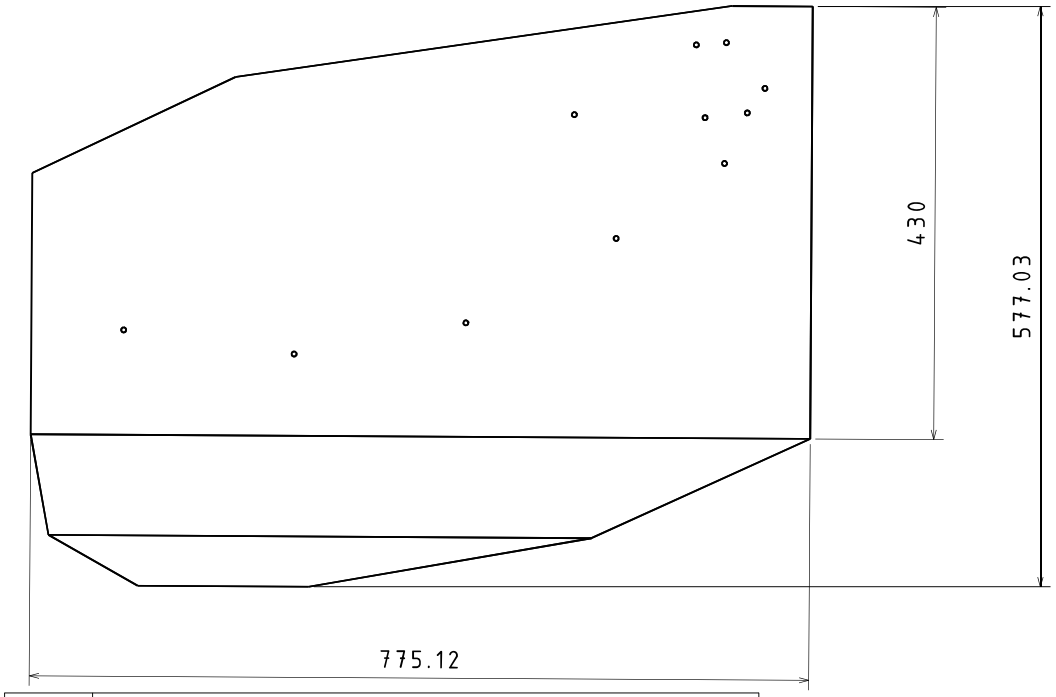

(1:5)

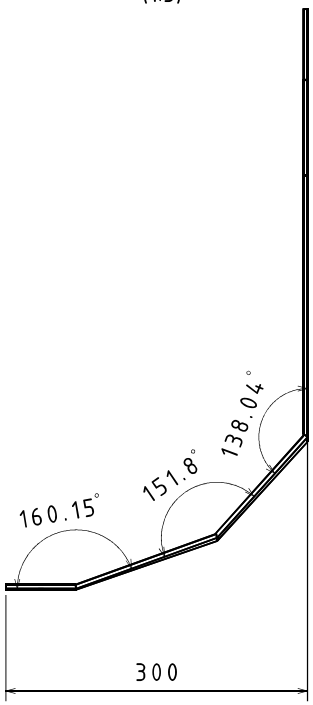

	LAMINATE TABLE		
OP NO.	MATERIAL SPEC	ORIENTATION	POSITION
1	CHECK ALL TOOLING IS CORRECT AND RELEASED		
2	EPC300-C245T-HS-3K-42-1250	0/90	1 PLY, ALL OVER
3	EPC300-C245T-HS-3K-42-1250	45	1 PLY, ALL OVER
4	FILM BOND ADHESIVE	-	1 PLY, ALL OVER
5	ROHACELL/NOMEX CORE AND INSERTS	-	-
6	FILM BOND ADHESIVE	-	1 PLY, ALL OVER
7	EPC300-C245T-HS-3K-42-1250	-	PATCH PLY
8	EPC300-C245T-HS-3K-42-1250	45	1 PLY, ALL OVER
9	EPC300-C245T-HS-3K-42-1250	0/90	1 PLY, ALL OVER
10	PEEL PLY	-	-
CURE	VACUUM BAG AND CURE. RAMP TO 80C, HOLD FOR 30MIN, RAMP TO 120C, HOLD FOR 120MIN, RAMP DOWN		

UBRacing

A3

IF IN DOUBT - ASK

DO NOT SCALE

TEL. +44 (0)121 414 4218

E-MAIL. ubracing@gmail.com

MATERIAL CERTIFICATE REQUIRED

DIMENSIONS IN MILIMETRES U.O.S

0 DECIMAL PLACES	±0.50
1 DECIMAL PLACE	±0.25
2 DECIMAL PLACES	±0.10
3 DECIMAL PLACES	±0.02
GENERAL CONCENTRICITY	0.1 TIR
ANGULAR TOLERANCE	±0.25°

REMOVE BURRS AND SHARP EDGES

This drawing and the copyright herein are the property of UBRacing. It is private & confidential and is issued on the express condition that it is not modified,copied or communicated to any other party without the written consent of UBRacing.

COMPONENT MASS (kg): 0.000

DRAWN BY: RGA

SCALE: 1:4

MATERIAL SPEC: CFRP-ROHACELL/NOMEX SANDWICH

HEAT TREATMENT: N/A

SURFACE TREATMENT: N/A

DESCRIPTION: REAR WING ENPLATE

SHEET: 1/1

PART NUMBER: UBR28_AE_N_441_01A

REV	DESCRIPTION	INIT	DATE
01A	INITIAL RELEASE	RGA	3/6/25

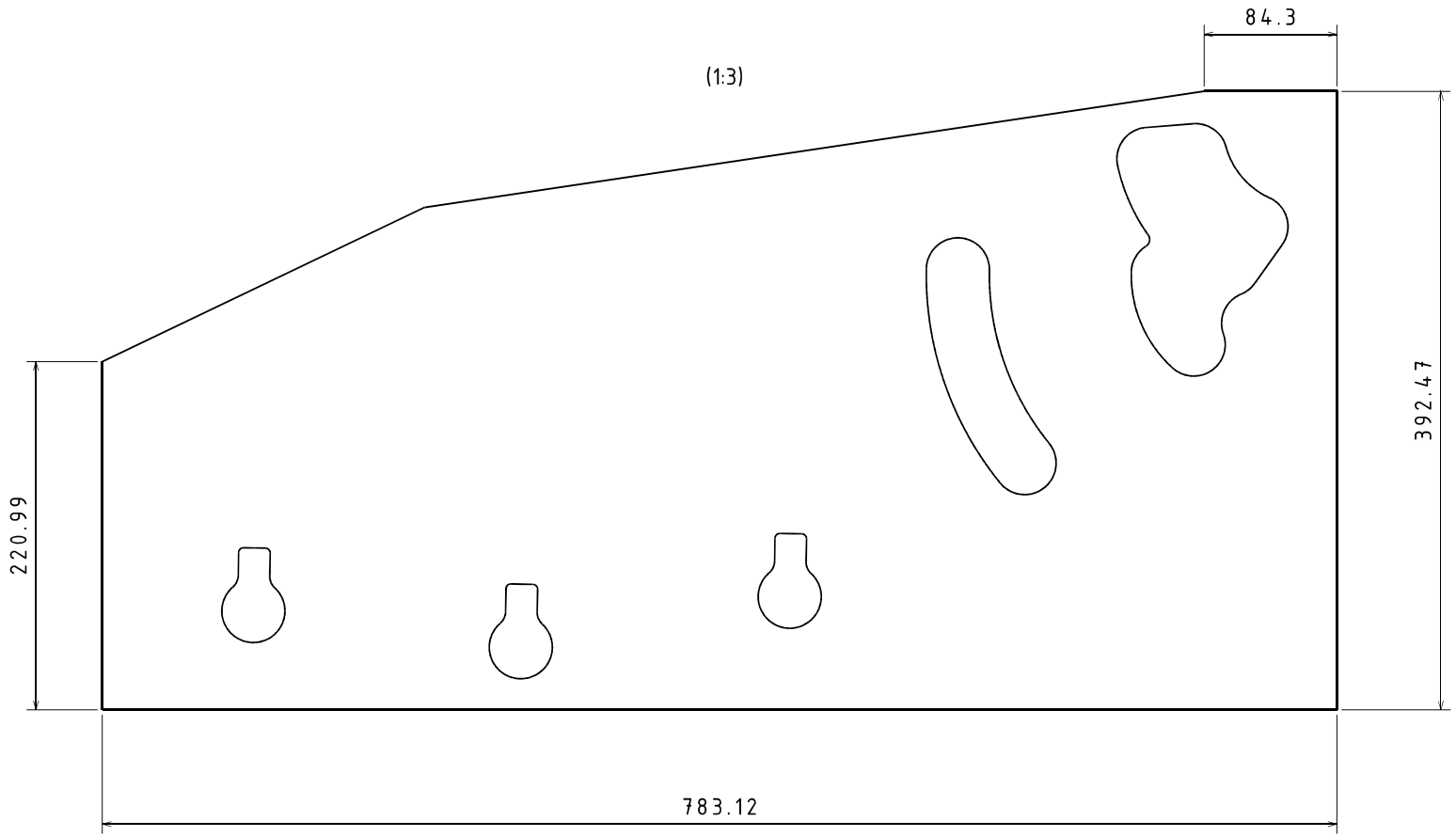

UBRacing

A3

IF IN DOUBT - ASK

DO NOT SCALE

TEL. +44 (0)121 414 4218

E-MAIL. ubracing@gmail.com

This drawing and the copyright herein are the property of UBRacing. It is private & confidential and is issued on the express condition that it is not modified,copied or communicated to any other party without the written consent of UBRacing.

MATERIAL CERTIFICATE REQUIRED

DIMENSIONS IN MILIMETRES U.O.S

0 DECIMAL PLACES	±0.50
1 DECIMAL PLACE	±0.25
2 DECIMAL PLACES	±0.10
3 DECIMAL PLACES	±0.02
GENERAL CONCENTRICITY	0.1 TIR
ANGULAR TOLERANCE	±0.25°

REMOVE BURRS AND SHARP EDGES

COMPONENT MASS (kg): 0.000

DRAWN BY: RGA

SCALE: 1:3

MATERIAL SPEC: ROHACELL IG-F 31 (5MM)

HEAT TREATMENT: N/A

SURFACE TREATMENT: N/A

DESCRIPTION: REAR WING ENDPLATE UPPER ROHACELL CORE

SHEET 1/1

PART NUMBER: UBR28_AE_N_44 4_01A

REV	DESCRIPTION	INIT	DATE
01A	INITIAL RELEASE	RGA	3/6/25

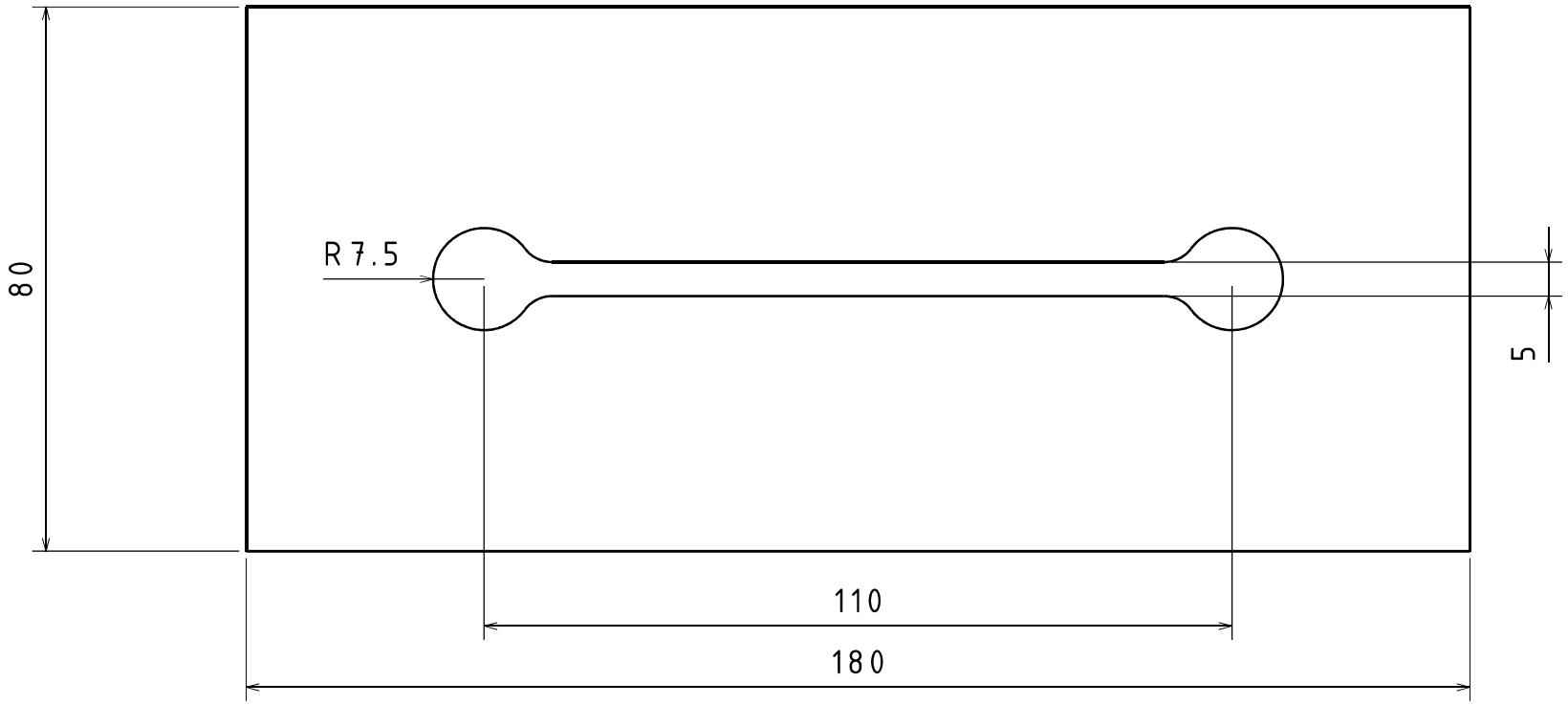

UBRacing

A4

IF IN DOUBT - ASK

DO NOT SCALE

TEL. +44 (0)121 414 4218

E-MAIL. ubracing@gmail.com

MATERIAL CERTIFICATE REQUIRED

DIMENSIONS IN MILIMETRES U.O.S

0 DECIMAL PLACES	±0.50
1 DECIMAL PLACE	±0.25
2 DECIMAL PLACES	±0.10
3 DECIMAL PLACES	±0.02
GENERAL CONCENTRICITY	0.1 TIR
ANGULAR TOLERANCE	±0.25°

REMOVE BURRS AND SHARP EDGES

This drawing and the copyright herein are the property of UBRacing. It is private & confidential and is issued on the express condition that it is not modified, copied or communicated to any other party without the written consent of UBRacing.

COMPONENT MASS (kg): 0.000

DRAWN BY: RGA

SCALE: 1:1

MATERIAL SPEC: ROHACELL IG-F31(5MM)

HEAT TREATMENT: N/A

SURFACE TREATMENT: N/A

DESCRIPTION: REAR WING ENDPLATE LOWER ROHACELL CORE

SHEET 1/1

PART NUMBER: UBR28_AE_N_445_01A

REV	DESCRIPTION	INIT	DATE
01A	INITIAL RELEASE	RGA	3/6/25

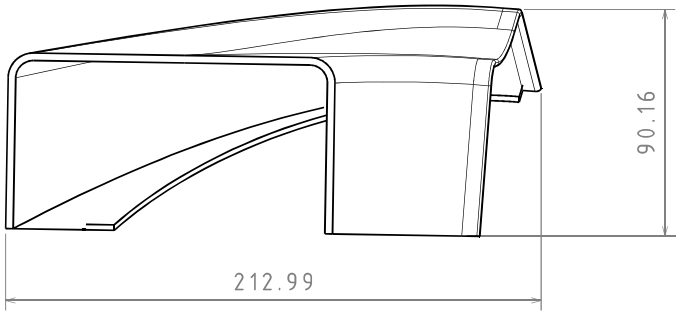

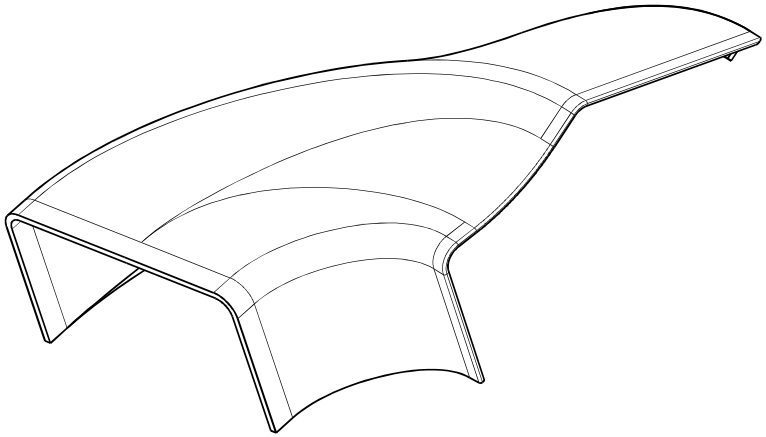

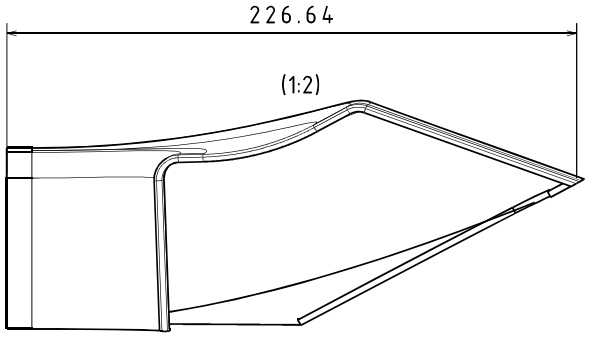

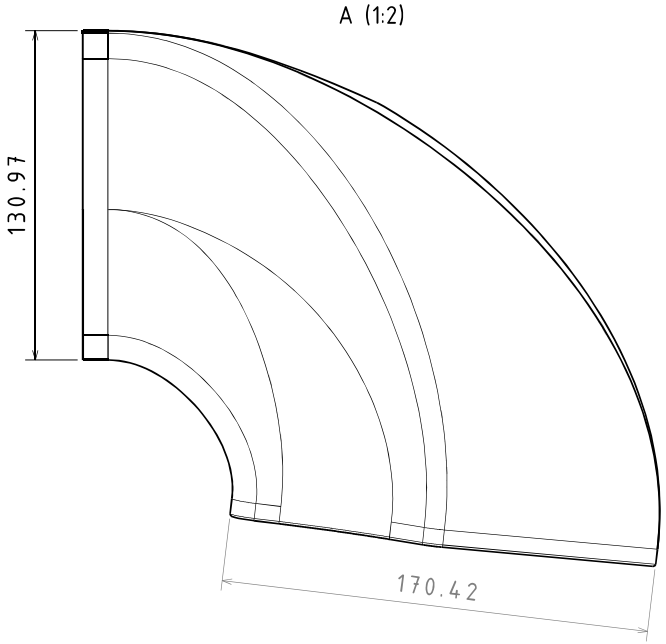

UBRacing	MATERIAL CERTIFICATE REQUIRED DIMENSIONS IN MILIMETRES U.O.S	COMPONENT MASS (kg)	0.000	MATERIAL SPEC	PLA
				HEAT TREATMENT	N/A
A3	IF IN DOUBT - ASK DO NOT SCALE	DRAWN BY	RGA	SURFACE TREATMENT	N/A
	0 DECIMAL PLACES ±0.50 1 DECIMAL PLACE ±0.25 2 DECIMAL PLACES ±0.10 3 DECIMAL PLACES ±0.02 GENERAL CONCENTRICITY 0.1 TIR ANGULAR TOLERANCE ±0.25°			DESCRIPTION	REAR WING ENDPLATE INTAKE
TEL.	+44 (0)121 414 4218				
E-MAIL.	ubracing@gmail.com				
	REMOVE BURRS AND SHARP EDGES	SCALE	1:2	SHEET 1/1	PART NUMBER UBR28_AE_N_451_01A

This drawing and the copyright herein are the property of UBRacing. It is private & confidential and is issued on the express condition that it is not modified,copied or communicated to any other party without the written consent of UBRacing.

REV	DESCRIPTION	INIT	DATE
01A	INITIAL RELEASE	RGA	3/6/25

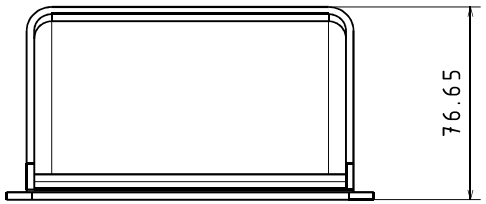

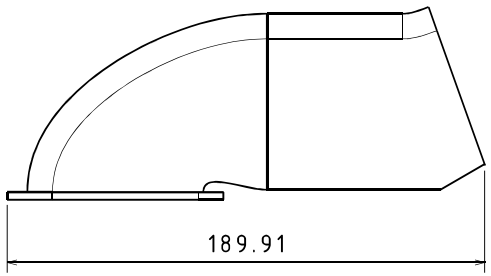

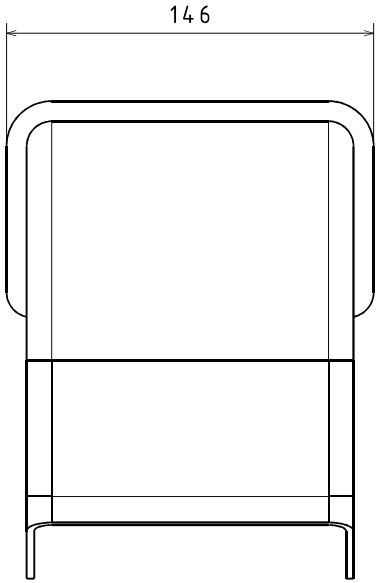

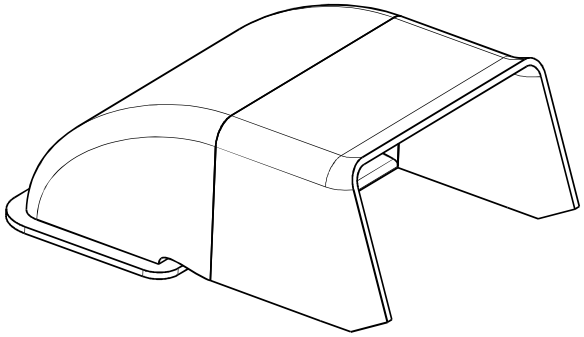

UBRacing	MATERIAL CERTIFICATE REQUIRED DIMENSIONS IN MILIMETRES U.O.S	COMPONENT MASS (kg)	0.000	MATERIAL SPEC	PLA
				HEAT TREATMENT	N/A
A3	IF IN DOUBT - ASK DO NOT SCALE	DRAWN BY	RGA	SURFACE TREATMENT	N/A
	0 DECIMAL PLACES ±0.50 1 DECIMAL PLACE ±0.25 2 DECIMAL PLACES ±0.10 3 DECIMAL PLACES ±0.02 GENERAL CONCENTRICITY 0.1 TIR ANGULAR TOLERANCE ±0.25°			DESCRIPTION	REAR ACCESS PANEL COOLING DUCT
TEL.	+44 (0)121 414 4218				
E-MAIL.	ubracing@gmail.com				
	REMOVE BURRS AND SHARP EDGES	SCALE	1:2	SHEET 1/1	PART NUMBER UBR28_AE_N_452_01A

This drawing and the copyright herein are the property of UBRacing. It is private & confidential and is issued on the express condition that it is not modified,copied or communicated to any other party without the written consent of UBRacing.

REV	DESCRIPTION	INIT	DATE
01A	INITIAL RELEASE	RGA	3/6/25

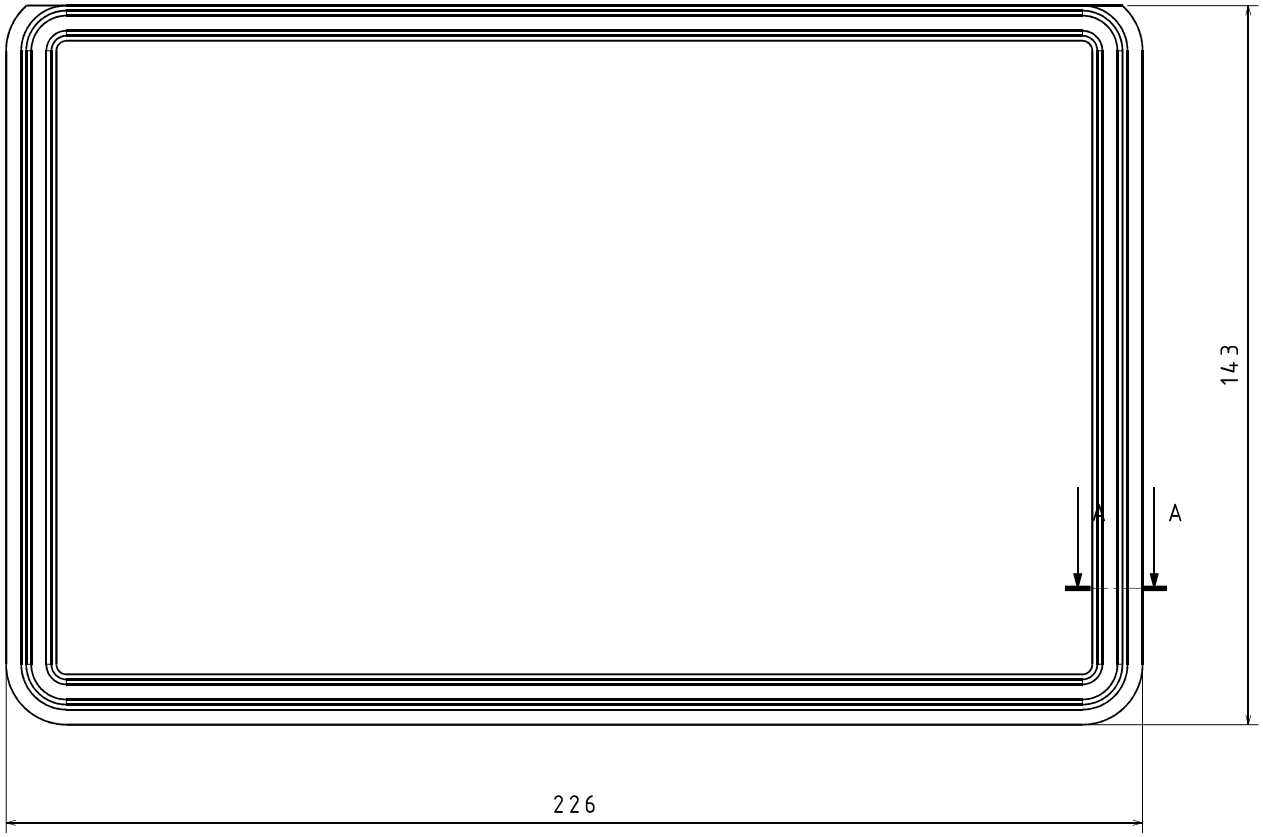

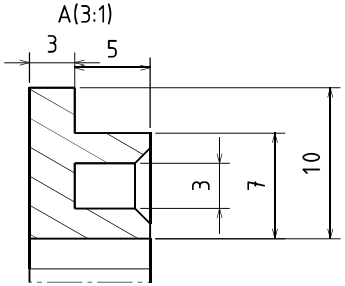

UBRacing

A3

IF IN DOUBT - ASK

DO NOT SCALE

TEL. +44 (0)121 414 4218

E-MAIL. ubracing@gmail.com

MATERIAL CERTIFICATE REQUIRED

DIMENSIONS IN MILIMETRES U.O.S

0 DECIMAL PLACES	±0.50
1 DECIMAL PLACE	±0.25
2 DECIMAL PLACES	±0.10
3 DECIMAL PLACES	±0.02
GENERAL CONCENTRICITY	0.1 TIR
ANGULAR TOLERANCE	±0.25°

REMOVE BURRS AND SHARP EDGES

This drawing and the copyright herein are the property of UBRacing. It is private & confidential and is issued on the express condition that it is not modified,copied or communicated to any other party without the written consent of UBRacing.

COMPONENT MASS (kg): 0.000

DRAWN BY: RGA

SCALE: 1:1

MATERIAL SPEC: PLA

HEAT TREATMENT: N/A

SURFACE TREATMENT: N/A

DESCRIPTION: ACCESS PANEL INTAKE SEAL

SHEET: 1/1

PART NUMBER: UBR28_AE_N_453_01A

REV	DESCRIPTION	INIT	DATE
01A	INITIAL RELEASE	RGA	3/6/25

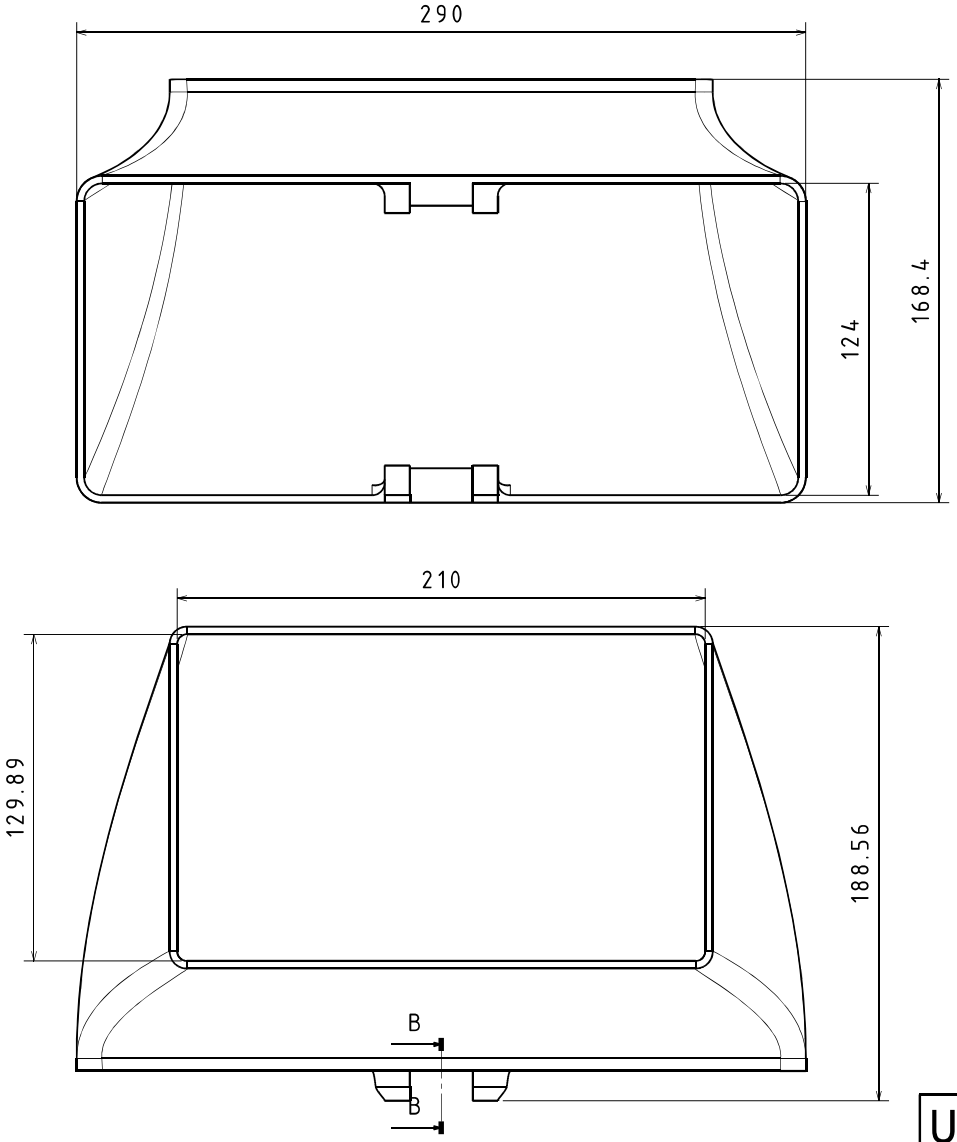

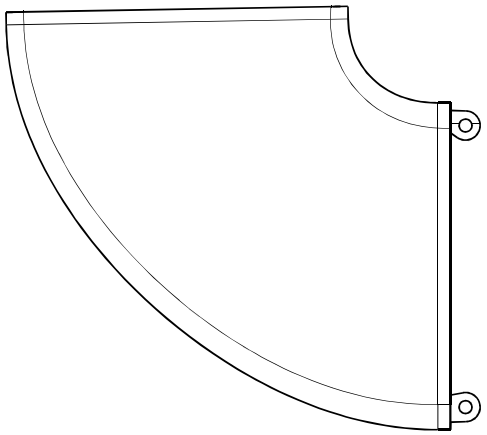

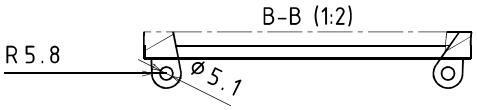

UBRacing

A3

IF IN DOUBT - ASK

DO NOT SCALE

TEL. +44 (0)121 414 4218

E-MAIL. ubracing@gmail.com

MATERIAL CERTIFICATE REQUIRED

DIMENSIONS IN MILIMETRES U.O.S

0 DECIMAL PLACES	±0.50
1 DECIMAL PLACE	±0.25
2 DECIMAL PLACES	±0.10
3 DECIMAL PLACES	±0.02
GENERAL CONCENTRICITY	0.1 TIR
ANGULAR TOLERANCE	±0.25°

REMOVE BURRS AND SHARP EDGES

This drawing and the copyright herein are the property of UBRacing. It is private & confidential and is issued on the express condition that it is not modified,copied or communicated to any other party without the written consent of UBRacing.

COMPONENT MASS (kg): 0.000

DRAWN BY: RGA

SCALE: 1:2

MATERIAL SPEC	PLA
HEAT TREATMENT	N/A
SURFACE TREATMENT	N/A

DESCRIPTION: INTERNAL INTAKE DUCTING

SHEET 1/1

PART NUMBER: UBR28_AE_N_454_01A

REV	DESCRIPTION	INIT	DATE
01A	INITIAL RELEASE	RGA	3/6/25

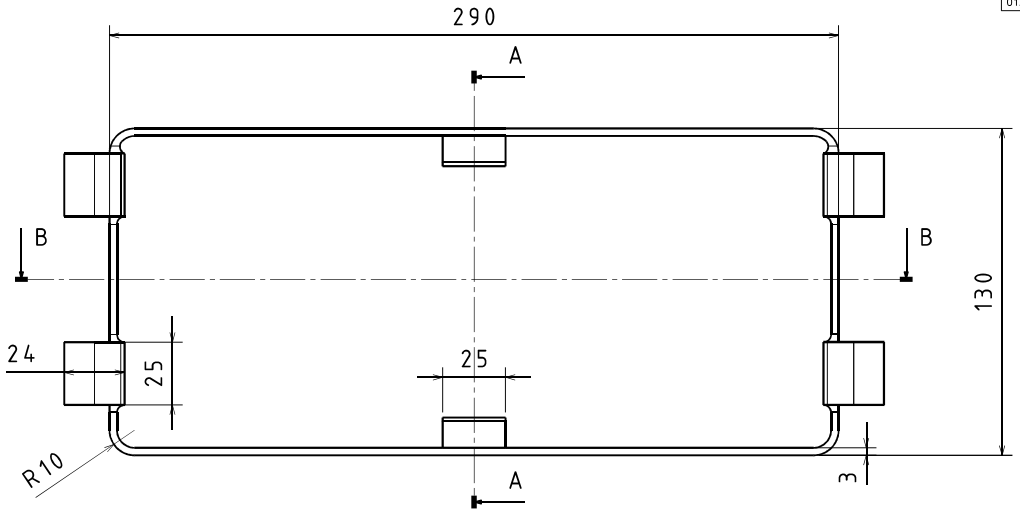

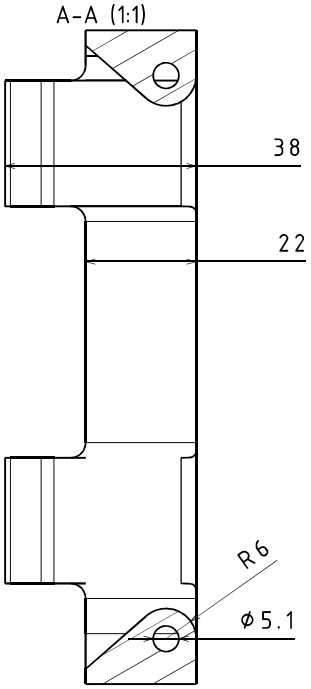

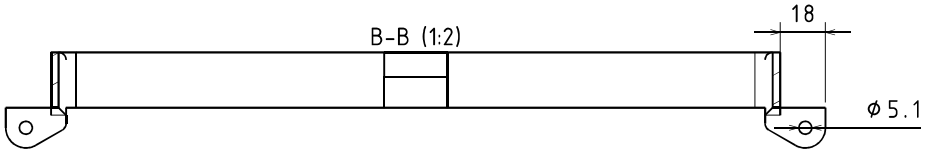

UBRacing

A3

IF IN DOUBT - ASK

DO NOT SCALE

TEL. +44 (0)121 414 4218

E-MAIL. ubracing@gmail.com

MATERIAL CERTIFICATE REQUIRED

DIMENSIONS IN MILIMETRES U.O.S

0 DECIMAL PLACES	±0.50
1 DECIMAL PLACE	±0.25
2 DECIMAL PLACES	±0.10
3 DECIMAL PLACES	±0.02
GENERAL CONCENTRICITY	0.1 TIR
ANGULAR TOLERANCE	±0.25°

REMOVE BURRS AND SHARP EDGES

This drawing and the copyright herein are the property of UBRacing. It is private & confidential and is issued on the express condition that it is not modified,copied or communicated to any other party without the written consent of UBRacing.

COMPONENT MASS (kg): 0.000

DRAWN BY: RGA

SCALE: 1:2

MATERIAL SPEC: CARBON-NYLON

HEAT TREATMENT: N/A

SURFACE TREATMENT: N/A

DESCRIPTION: COOLING INTAKE AND RAD CHASSIS MOUNT

SHEET 1/1

PART NUMBER: UBR28_AE_N_455_01A

REV	DESCRIPTION	INIT	DATE
01A	INITIAL RELEASE	RGA	3/6/25

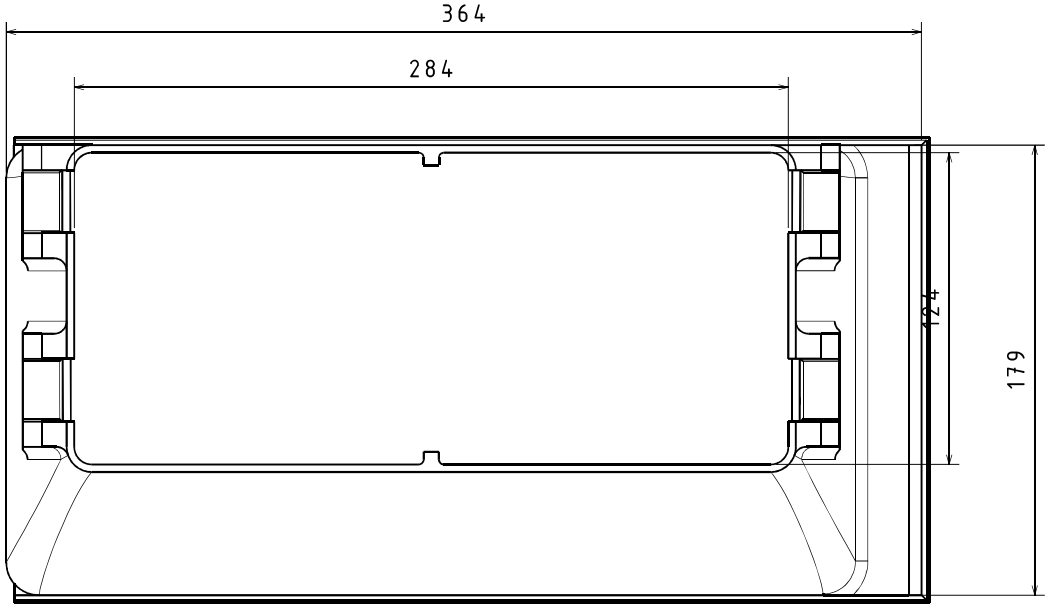

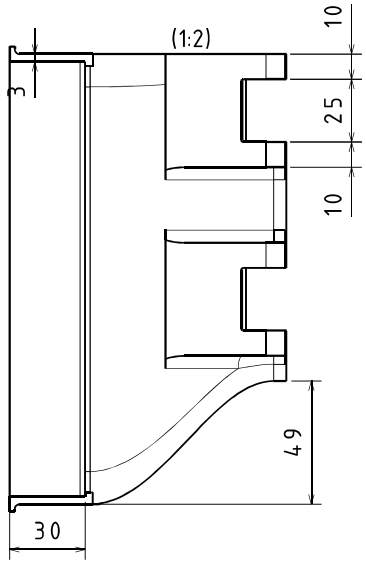

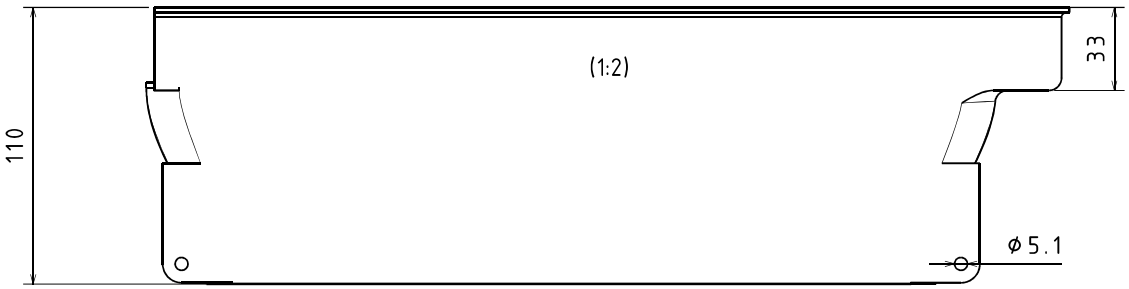

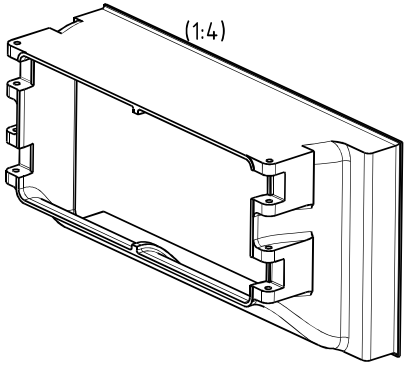

UBRacing	MATERIAL CERTIFICATE REQUIRED DIMENSIONS IN MILIMETRES U.O.S	COMPONENT MASS (kg)	0.000	MATERIAL SPEC	PLA
				HEAT TREATMENT	N/A
A3	IF IN DOUBT - ASK DO NOT SCALE	DRAWN BY	RGA	SURFACE TREATMENT	N/A
	0 DECIMAL PLACES ±0.50 1 DECIMAL PLACE ±0.25 2 DECIMAL PLACES ±0.10 3 DECIMAL PLACES ±0.02 GENERAL CONCENTRICITY 0.1 TIR ANGULAR TOLERANCE ±0.25°			DESCRIPTION	FORWARD RAD HOUSING
TEL.	+44 (0)121 414 4218				
E-MAIL.	ubracing@gmail.com				
	REMOVE BURRS AND SHARP EDGES				
	This drawing and the copyright herein are the property of UBRacing. It is private & confidential and is issued on the express condition that it is not modified,copied or communicated to any other party without the written consent of UBRacing.	SCALE	1:2	SHEET 1/1	PART NUMBER UBR28_AE_N_4561_01A

REV	DESCRIPTION	INIT	DATE
01A	INITIAL RELEASE	RGA	3/6/25

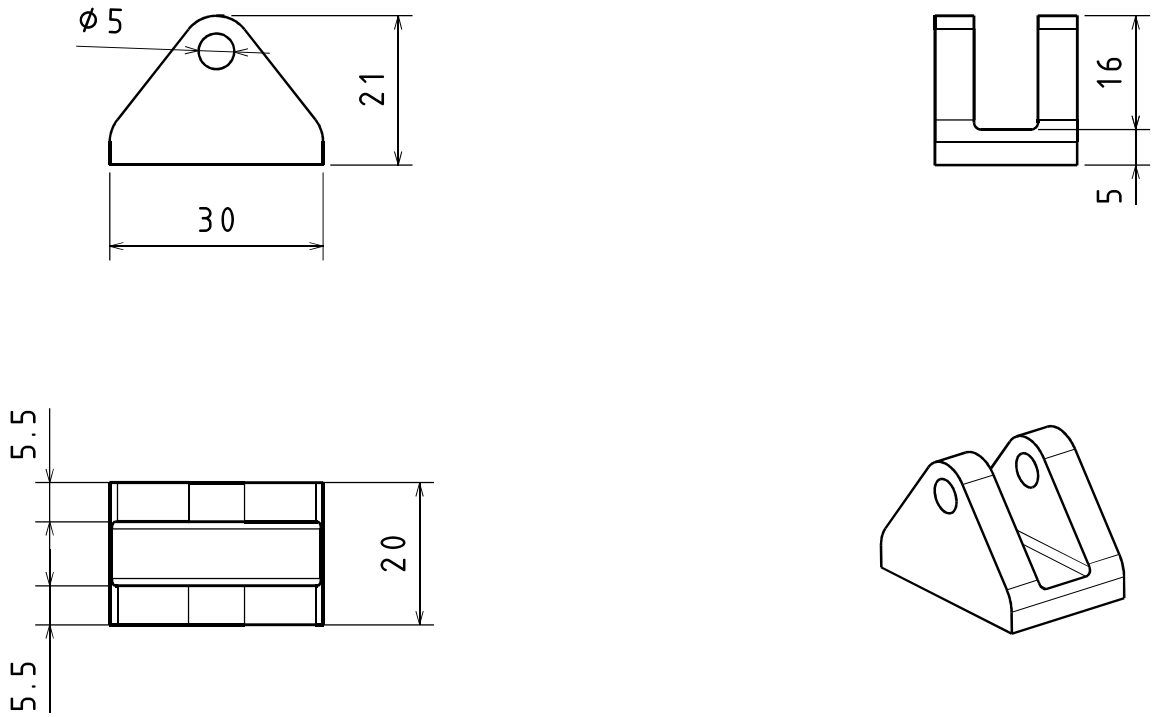

UBRacing

A4

IF IN DOUBT - ASK

DO NOT SCALE

TEL. +44 (0)121 414 4218

E-MAIL. ubracing@gmail.com

MATERIAL CERTIFICATE REQUIRED

DIMENSIONS IN MILIMETRES U.O.S

0 DECIMAL PLACES	±0.50
1 DECIMAL PLACE	±0.25
2 DECIMAL PLACES	±0.10
3 DECIMAL PLACES	±0.02
GENERAL CONCENTRICITY	0.1 TIR
ANGULAR TOLERANCE	±0.25°

REMOVE BURRS AND SHARP EDGES

This drawing and the copyright herein are the property of UBRacing. It is private & confidential and is issued on the express condition that it is not modified, copied or communicated to any other party without the written consent of UBRacing.

COMPONENT MASS (kg): 0.000

DRAWN BY: RGA

SCALE: 1:1

MATERIAL SPEC: CARBON NYLON

HEAT TREATMENT: N/A

SURFACE TREATMENT: N/A

DESCRIPTION: RADIATOR HOUSING SUPPORT CLEVIS

SHEET 1/1

PART NUMBER: UBR28_AE_N_459_01A

REV	DESCRIPTION	INIT	DATE
01A	INITIAL RELEASE	RGA	3/6/25

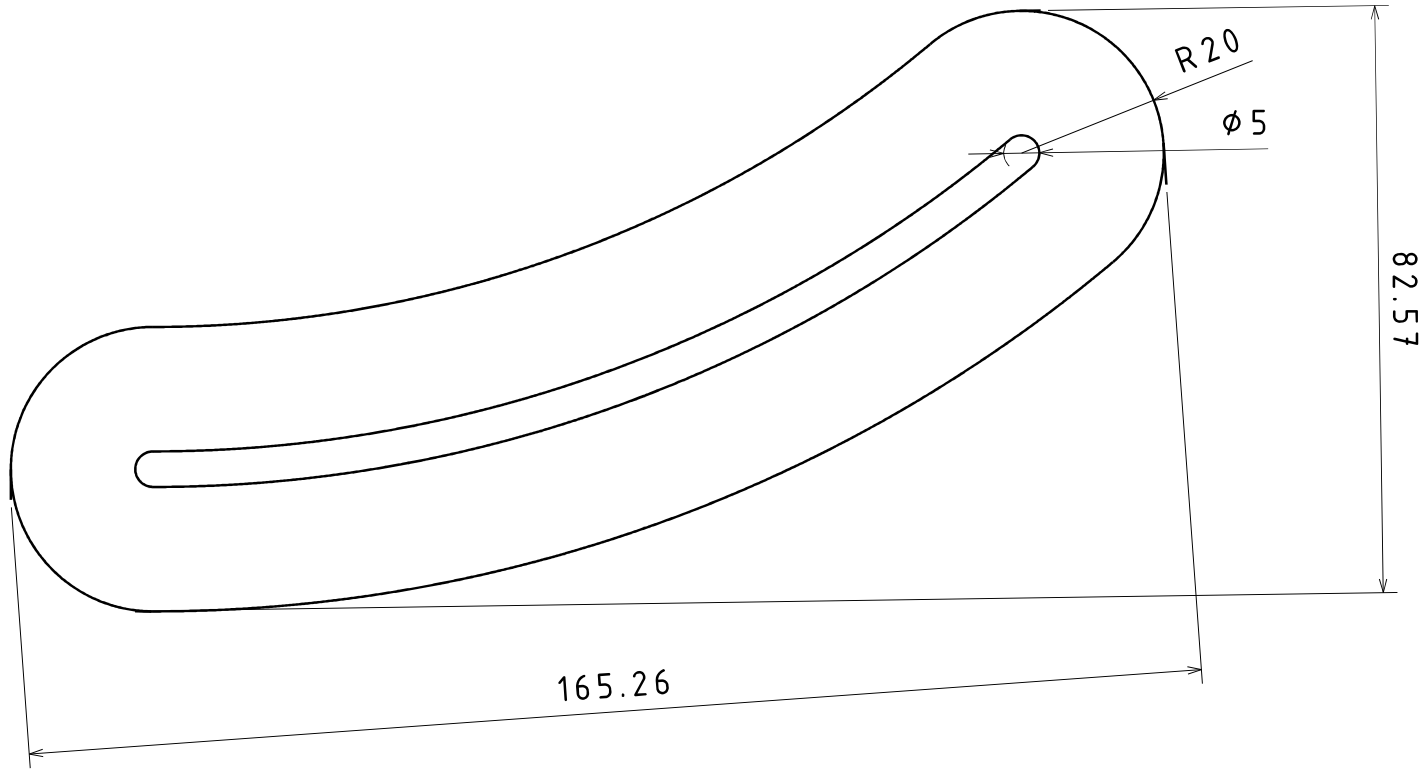

UBRacing

A4

IF IN DOUBT - ASK

DO NOT SCALE

TEL. +44 (0)121 414 4218

E-MAIL. ubracing@gmail.com

MATERIAL CERTIFICATE REQUIRED

DIMENSIONS IN MILIMETRES U.O.S

0 DECIMAL PLACES	±0.50
1 DECIMAL PLACE	±0.25
2 DECIMAL PLACES	±0.10
3 DECIMAL PLACES	±0.02
GENERAL CONCENTRICITY	0.1 TIR
ANGULAR TOLERANCE	±0.25°

REMOVE BURRS AND SHARP EDGES

This drawing and the copyright herein are the property of UBRacing. It is private & confidential and is issued on the express condition that it is not modified, copied or communicated to any other party without the written consent of UBRacing.

COMPONENT MASS (kg): 0.000

DRAWN BY: RGA

SCALE: 1:1

MATERIAL SPEC: 3MM PLYWOOD

HEAT TREATMENT: N/A

SURFACE TREATMENT: N/A

DESCRIPTION: REAR WING ENDPLATE SECOND ELEMENT INSERT

SHEET 1/1

PART NUMBER: UBR28_AE_N_487_01A

REV	DESCRIPTION	INIT	DATE
01A	INITIAL RELEASE	RGA	3/6/25

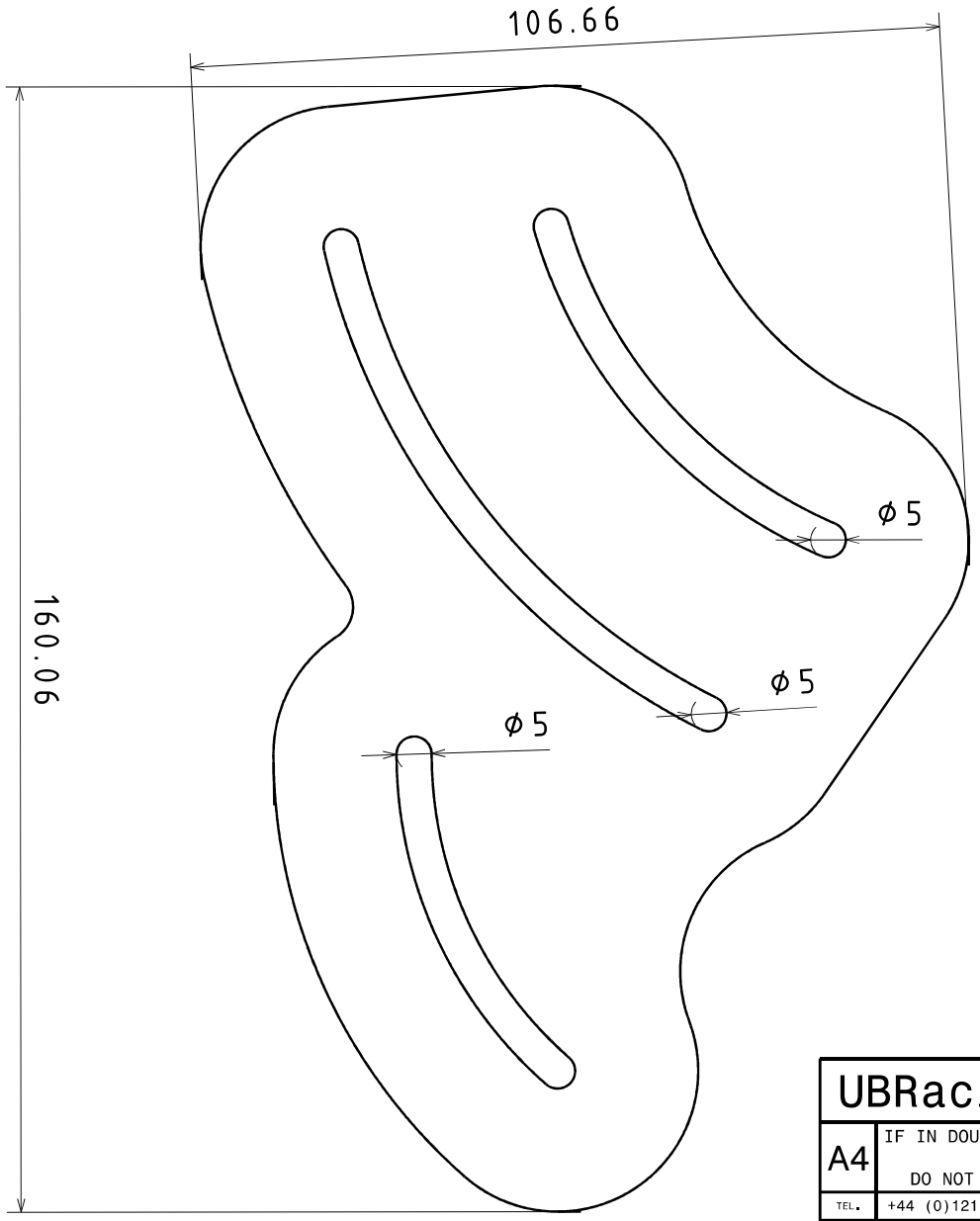

UBRacing

A4

IF IN DOUBT - ASK

DO NOT SCALE

TEL. +44 (0)121 414 4218

E-MAIL. ubracing@gmail.com

MATERIAL CERTIFICATE REQUIRED

DIMENSIONS IN MILIMETRES U.O.S

0 DECIMAL PLACES	±0.50
1 DECIMAL PLACE	±0.25
2 DECIMAL PLACES	±0.10
3 DECIMAL PLACES	±0.02
GENERAL CONCENTRICITY	0.1 TIR
ANGULAR TOLERANCE	±0.25°

REMOVE BURRS AND SHARP EDGES

This drawing and the copyright herein are the property of UBRacing. It is private & confidential and is issued on the express condition that it is not modified, copied or communicated to any other party without the written consent of UBRacing.

COMPONENT MASS (kg): 0.000

DRAWN BY: RGA

SCALE: 1:1

MATERIAL SPEC: 3MM PLYWOOD

HEAT TREATMENT: N/A

SURFACE TREATMENT: N/A

DESCRIPTION: REAR WING ENDPLATE THIRD ELEMENT INSERT

SHEET 1/1

PART NUMBER: UBR28_AE_N_488_01A

REV	DESCRIPTION	INIT	DATE
01A	INITIAL RELEASE	RGA	3/6/25

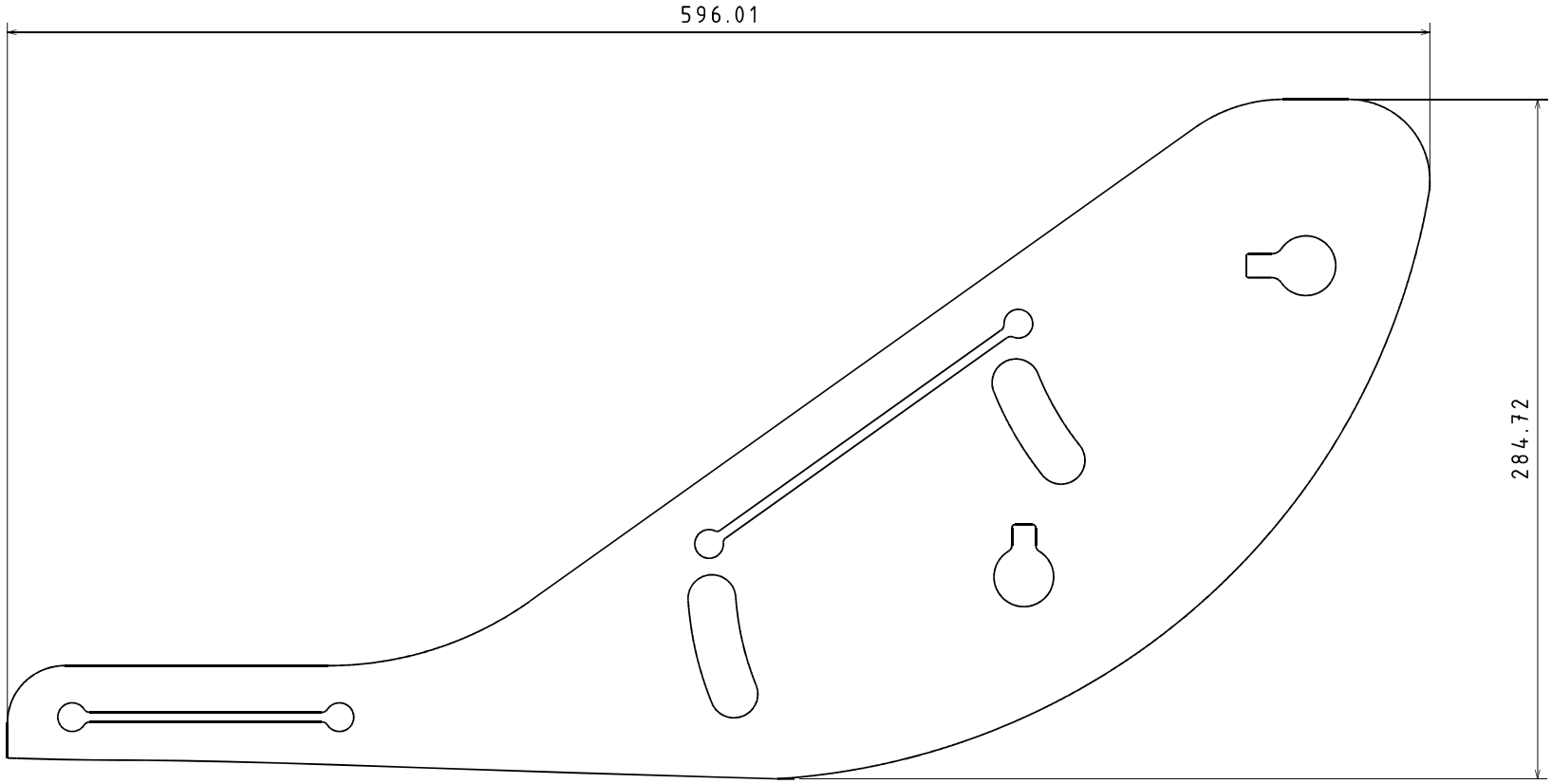

UBRacing

A3

IF IN DOUBT - ASK

DO NOT SCALE

TEL. +44 (0)121 414 4218

E-MAIL. ubracing@gmail.com

This drawing and the copyright herein are the property of UBRacing. It is private & confidential and is issued on the express condition that it is not modified,copied or communicated to any other party without the written consent of UBRacing.

MATERIAL CERTIFICATE REQUIRED

DIMENSIONS IN MILIMETRES U.O.S

0 DECIMAL PLACES	±0.50
1 DECIMAL PLACE	±0.25
2 DECIMAL PLACES	±0.10
3 DECIMAL PLACES	±0.02
GENERAL CONCENTRICITY	0.1 TIR
ANGULAR TOLERANCE	±0.25°

REMOVE BURRS AND SHARP EDGES

COMPONENT MASS (kg)	0.000
DRAWN BY	RGA
SCALE	1:2
MATERIAL SPEC	10MM 6061 ALUMINIUM
HEAT TREATMENT	N/A
SURFACE TREATMENT	N/A
DESCRIPTION	FRONT WING CENTERPLATE ROHACELL CORE
SHEET	1/1
PART NUMBER	UBR28_AE_N_14 12_01A

REV	DESCRIPTION	INIT	DATE
01A	INITIAL RELEASE	RGA	3/6/25

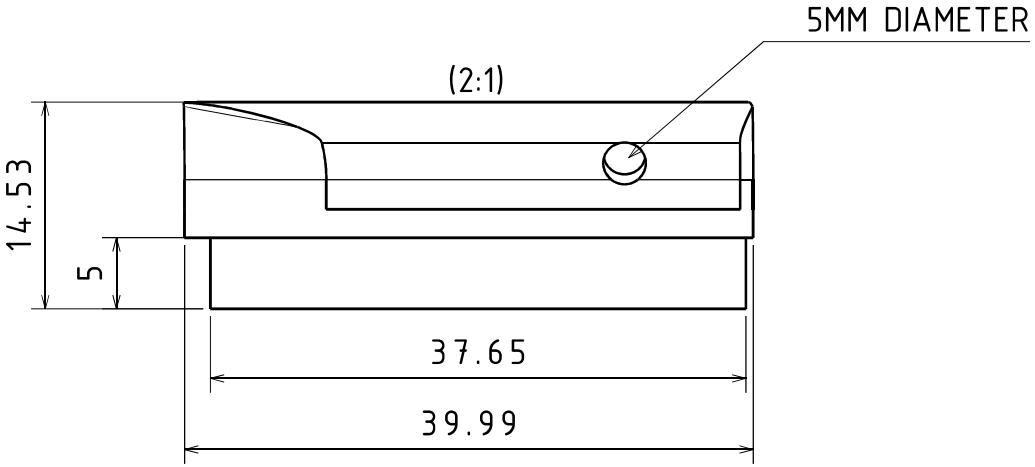

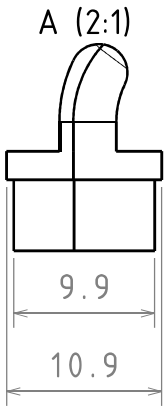

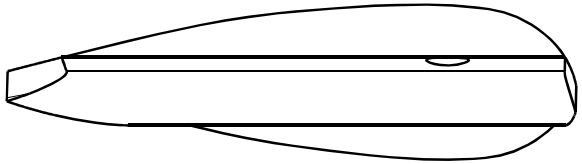

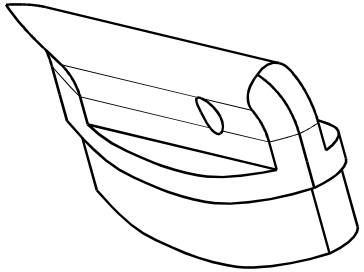

UBRacing	MATERIAL CERTIFICATE REQUIRED DIMENSIONS IN MILIMETRES U.O.S	COMPONENT MASS (kg)	0.000	MATERIAL SPEC	CARBON NYLON
				HEAT TREATMENT	N/A
A4	IF IN DOUBT - ASK DO NOT SCALE	DRAWN BY	RGA	SURFACE TREATMENT	N/A
	0 DECIMAL PLACES ±0.50 1 DECIMAL PLACE ±0.25 2 DECIMAL PLACES ±0.10 3 DECIMAL PLACES ±0.02 GENERAL CONCENTRICITY 0.1 TIR ANGULAR TOLERANCE ±0.25°			DESCRIPTION	SIDE DIFFUSER SUPPORT MOUNT P2
TEL.	+44 (0)121 414 4218				
E-MAIL.	ubracing@gmail.com				
	REMOVE BURRS AND SHARP EDGES				
		SCALE	2:1	SHEET 1/1	PART NUMBER UBR28_AE_N_2912_01A

This drawing and the copyright herein are the property of UBRacing. It is private & confidential and is issued on the express condition that it is not modified, copied or communicated to any other party without the written consent of UBRacing.

REV	DESCRIPTION	INIT	DATE
01A	INITIAL RELEASE	RGA	3/6/25

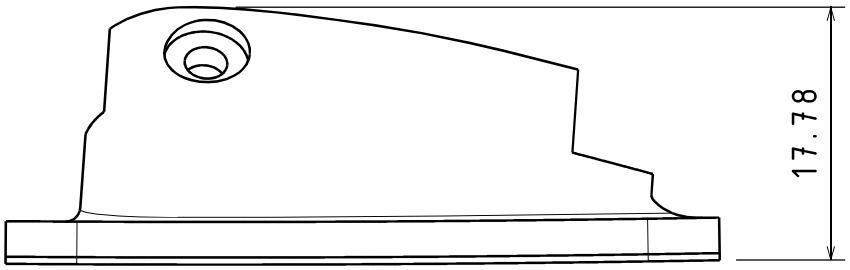

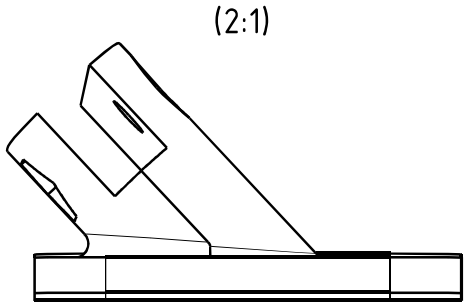

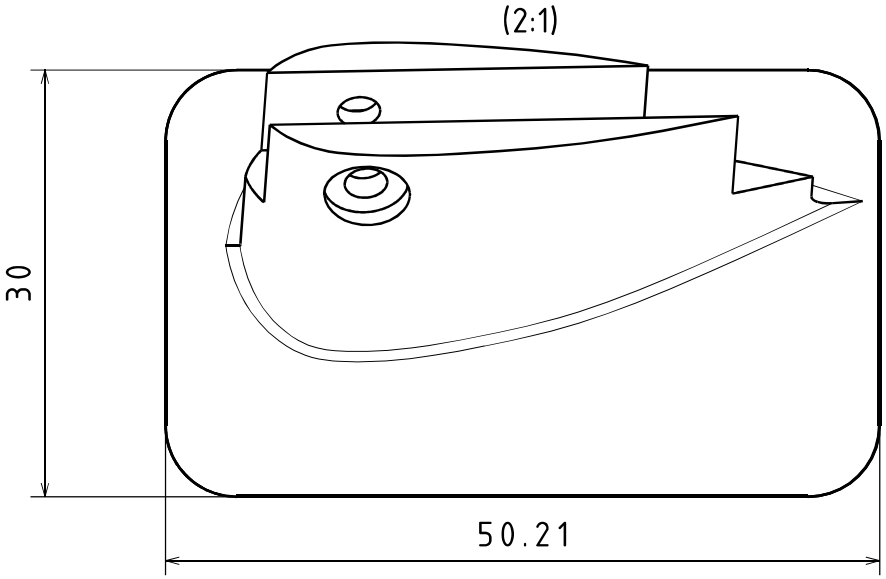

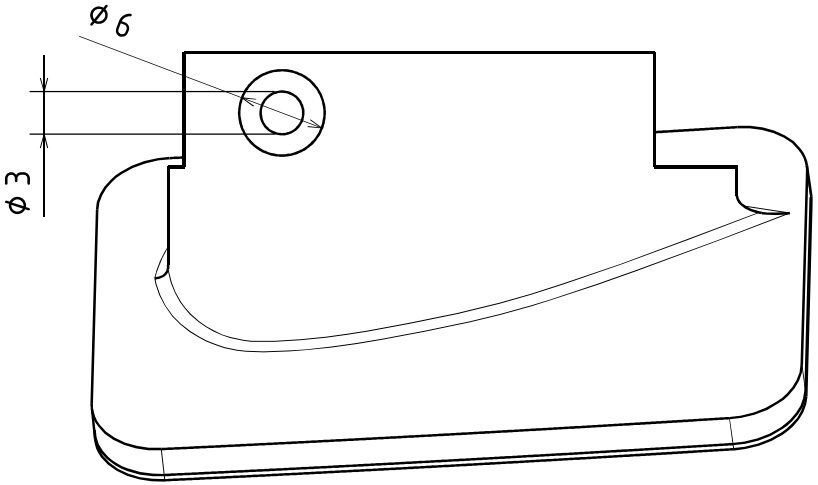

UBRacing	MATERIAL CERTIFICATE REQUIRED DIMENSIONS IN MILIMETRES U.O.S	COMPONENT MASS (kg)	0.000	MATERIAL SPEC	CARBON-NYLON
				HEAT TREATMENT	N/A
A4	IF IN DOUBT - ASK DO NOT SCALE	DRAWN BY	RGA	SURFACE TREATMENT	N/A
TEL.	+44 (0)121 414 4218			DESCRIPTION	SIDE DIFFUSER SUPPORT MOUNT P4
E-MAIL.	ubracing@gmail.com				
		SCALE	2:1	SHEET 1/1	PART NUMBER UBR28_AE_N_2932_01A

0 DECIMAL PLACES ±0.50
1 DECIMAL PLACE ±0.25
2 DECIMAL PLACES ±0.10
3 DECIMAL PLACES ±0.02
GENERAL CONCENTRICITY 0.1 TIR
ANGULAR TOLERANCE ±0.25°

REMOVE BURRS AND SHARP EDGES

This drawing and the copyright herein are the property of UBRacing. It is private & confidential and is issued on the express condition that it is not modified, copied or communicated to any other party without the written consent of UBRacing.

REV	DESCRIPTION	INIT	DATE
01A	INITIAL RELEASE	RGA	3/6/25

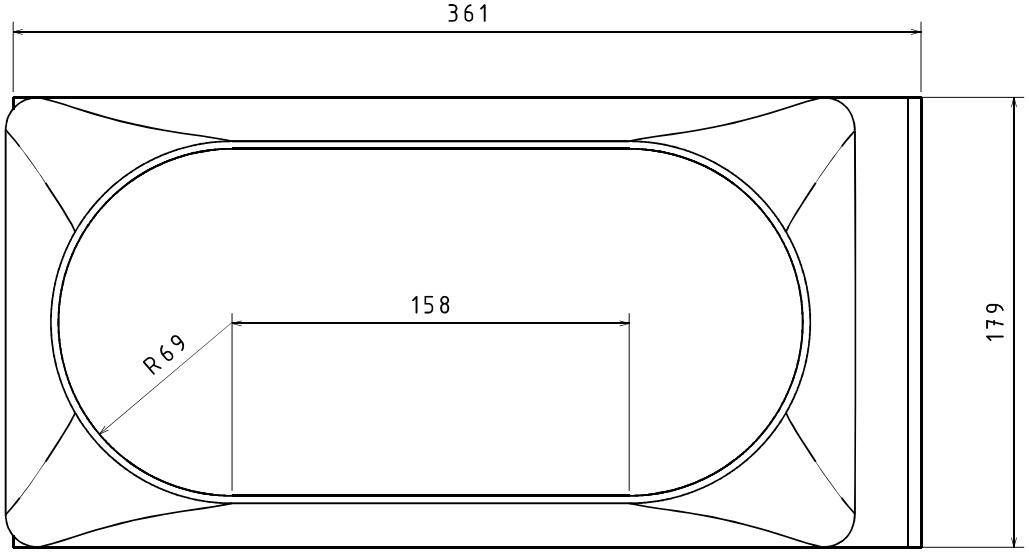

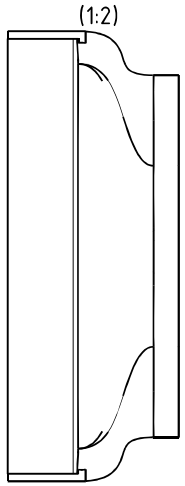

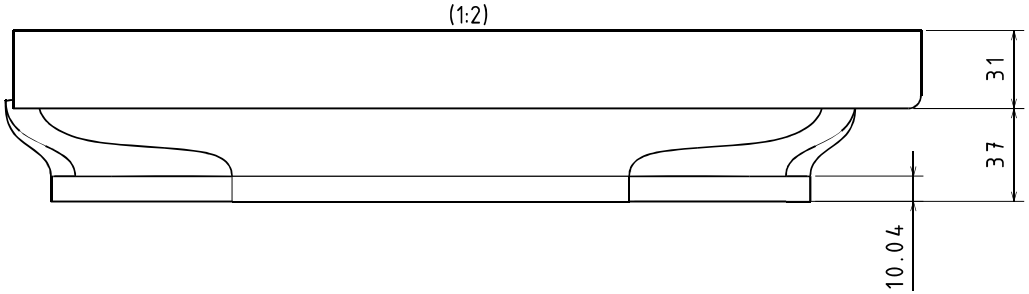

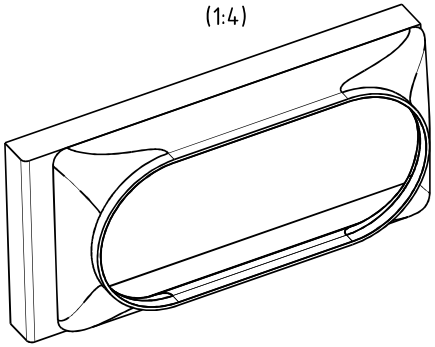

UBRacing

A3

IF IN DOUBT - ASK

DO NOT SCALE

TEL. +44 (0)121 414 4218

E-MAIL. ubracing@gmail.com

MATERIAL CERTIFICATE REQUIRED

DIMENSIONS IN MILIMETRES U.O.S

0 DECIMAL PLACES	±0.50
1 DECIMAL PLACE	±0.25
2 DECIMAL PLACES	±0.10
3 DECIMAL PLACES	±0.02
GENERAL CONCENTRICITY	0.1 TIR
ANGULAR TOLERANCE	±0.25°

REMOVE BURRS AND SHARP EDGES

This drawing and the copyright herein are the property of UBRacing. It is private & confidential and is issued on the express condition that it is not modified,copied or communicated to any other party without the written consent of UBRacing.

COMPONENT MASS (kg): 0.000

DRAWN BY: RGA

SCALE: 1:2

MATERIAL SPEC: PLA

HEAT TREATMENT: N/A

SURFACE TREATMENT: N/A

DESCRIPTION: REAR RAD HOUSING

SHEET: 1/1

PART NUMBER: UBR28_AE_N_4562_01A

REV	DESCRIPTION	INIT	DATE
01A	INITIAL RELEASE	RGA	3/6/25

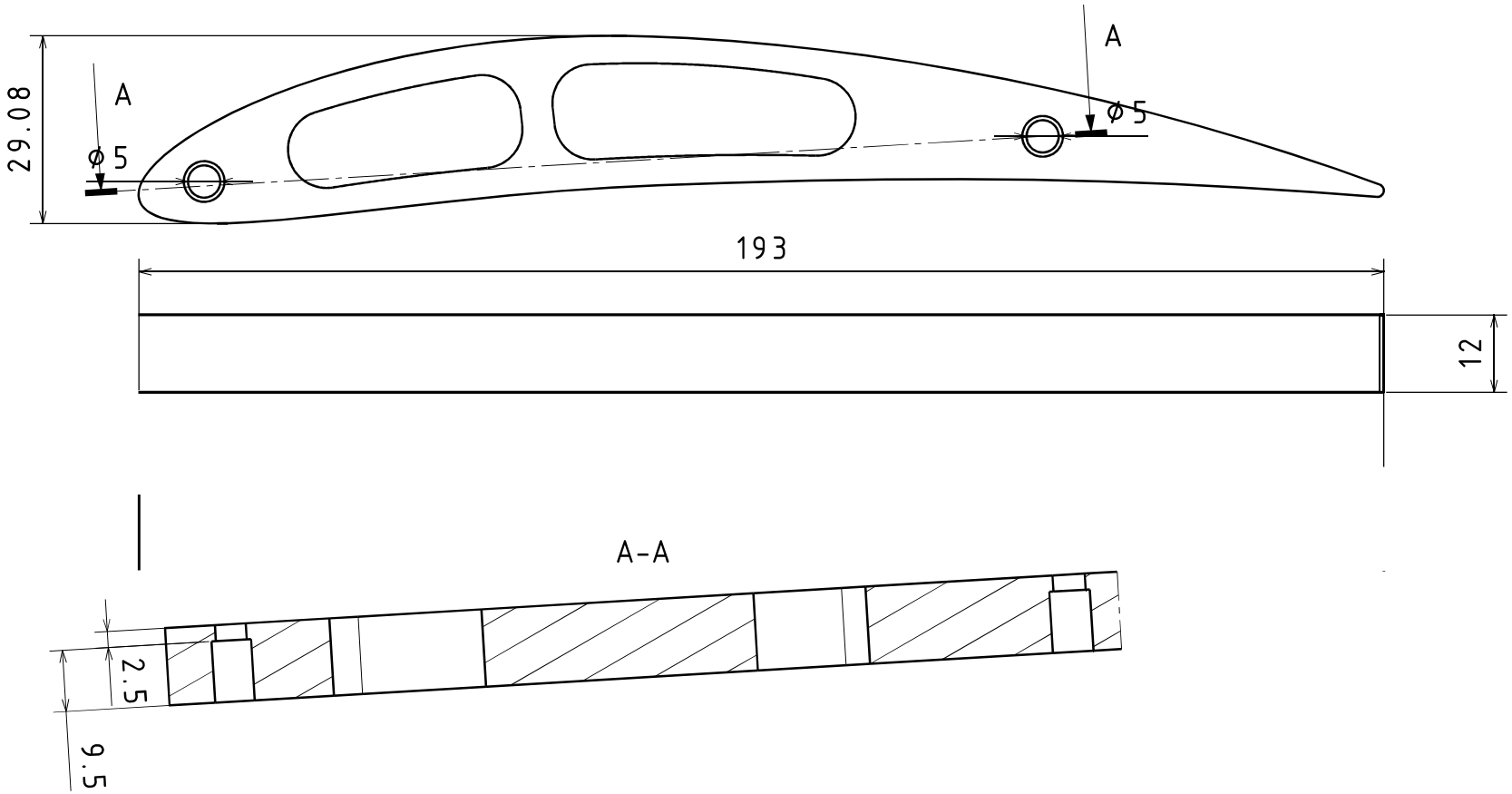

UBRacing	MATERIAL CERTIFICATE REQUIRED DIMENSIONS IN MILIMETRES U.O.S	COMPONENT MASS (kg)	0.000	MATERIAL SPEC	PLA
				HEAT TREATMENT	N/A
A4	IF IN DOUBT - ASK DO NOT SCALE	DRAWN BY	RGA	SURFACE TREATMENT	N/A
	0 DECIMAL PLACES ±0.50 1 DECIMAL PLACE ±0.25 2 DECIMAL PLACES ±0.10 3 DECIMAL PLACES ±0.02 GENERAL CONCENTRICITY 0.1 TIR ANGULAR TOLERANCE ±0.25°			DESCRIPTION	NACA 7412 STANDARD STRUCTRAL INSERT
TEL.	+44 (0)121 414 4218				
E-MAIL.	ubracing@gmail.com				
	REMOVE BURRS AND SHARP EDGES				
		SCALE	2:1	SHEET 1/1	PART NUMBER UBR28_AE_N_7412_200S_01A

This drawing and the copyright herein are the property of UBRacing. It is private & confidential and is issued on the express condition that it is not modified, copied or communicated to any other party without the written consent of UBRacing.

REV	DESCRIPTION	INIT	DATE
01A	INITIAL RELEASE	RGA	3/6/25

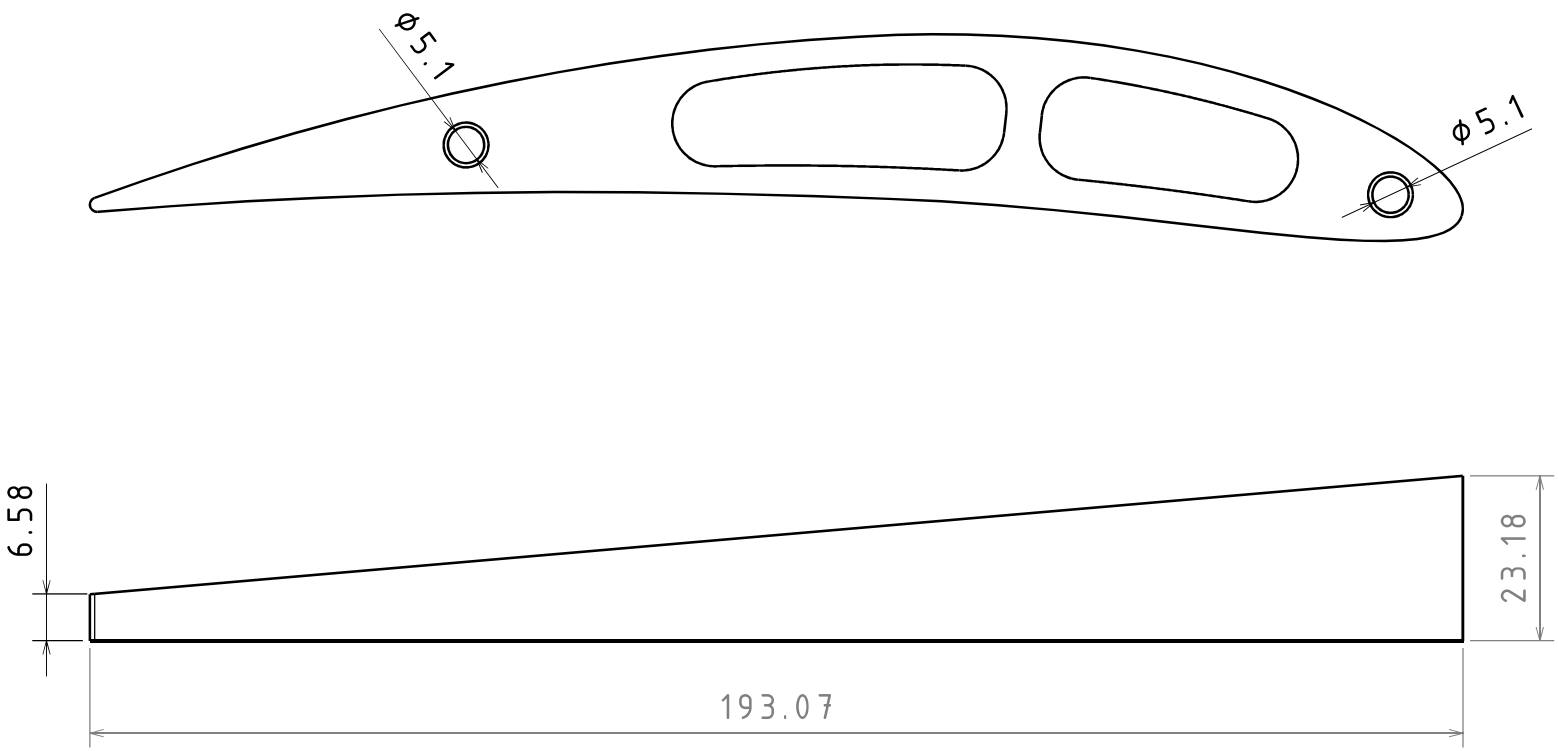

UBRacing

A4

IF IN DOUBT - ASK

DO NOT SCALE

TEL. +44 (0)121 414 4218

E-MAIL. ubracing@gmail.com

MATERIAL CERTIFICATE REQUIRED

DIMENSIONS IN MILIMETRES U.O.S

0 DECIMAL PLACES	±0.50
1 DECIMAL PLACE	±0.25
2 DECIMAL PLACES	±0.10
3 DECIMAL PLACES	±0.02
GENERAL CONCENTRICITY	0.1 TIR
ANGULAR TOLERANCE	±0.25°

REMOVE BURRS AND SHARP EDGES

This drawing and the copyright herein are the property of UBRacing. It is private & confidential and is issued on the express condition that it is not modified, copied or communicated to any other party without the written consent of UBRacing.

COMPONENT MASS (kg): 0.000

DRAWN BY: RGA

SCALE: 1:1

MATERIAL SPEC: PLA

HEAT TREATMENT: N/A

SURFACE TREATMENT: N/A

DESCRIPTION: SLANTED INTERNAL FISH FOR NACA7412 200MM

SHEET 1/1

PART NUMBER: UBR28_AE_N_7412_200S_K

REV	DESCRIPTION	INIT	DATE
01A	INITIAL RELEASE	RGA	3/6/25

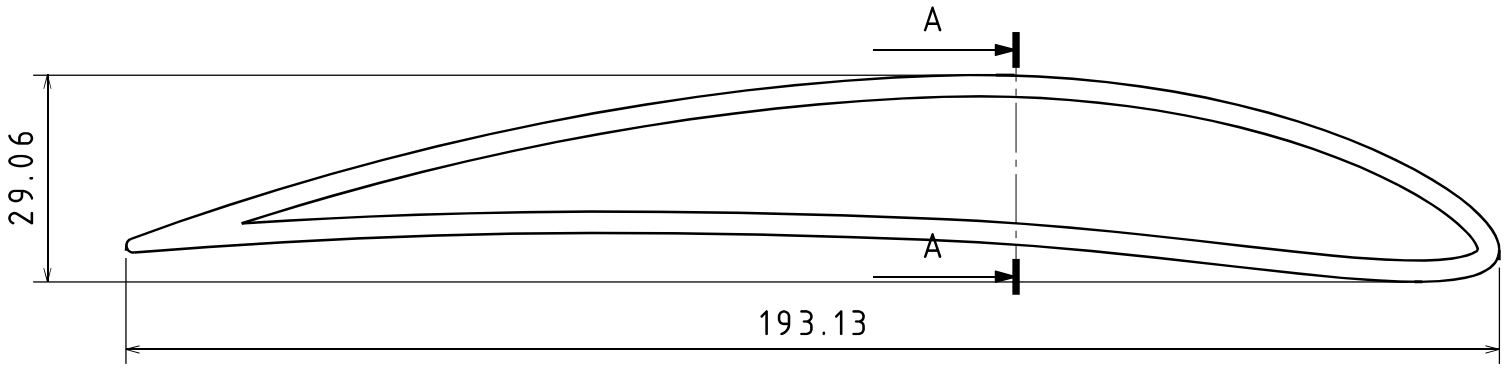

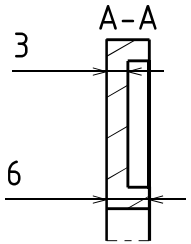

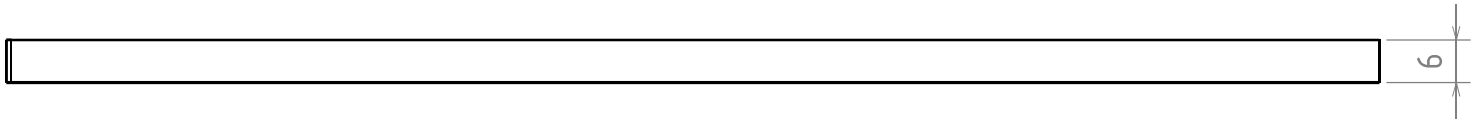

UBRacing	MATERIAL CERTIFICATE REQUIRED DIMENSIONS IN MILIMETRES U.O.S	COMPONENT MASS (kg)	0.000	MATERIAL SPEC	PLA
				HEAT TREATMENT	N/A
A4	IF IN DOUBT - ASK DO NOT SCALE	DRAWN BY	RGA	SURFACE TREATMENT	N/A
	0 DECIMAL PLACES ±0.50 1 DECIMAL PLACE ±0.25 2 DECIMAL PLACES ±0.10 3 DECIMAL PLACES ±0.02 GENERAL CONCENTRICITY 0.1 TIR ANGULAR TOLERANCE ±0.25°			DESCRIPTION	BLANK INTERNAL FISH FOR NACA7412 200MM
TEL.	+44 (0)121 414 4218				
E-MAIL.	ubracing@gmail.com				
	REMOVE BURRS AND SHARP EDGES				
		SCALE	1:1	SHEET 1/1	PART NUMBER UBR28_AE_N_7412_200t

This drawing and the copyright herein are the property of UBRacing. It is private & confidential and is issued on the express condition that it is not modified, copied or communicated to any other party without the written consent of UBRacing.

REV	DESCRIPTION	INIT	DATE
01A	INITIAL RELEASE	RGA	9/12/24

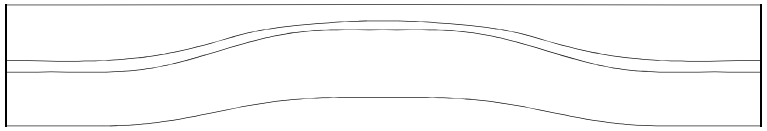

(1:2)

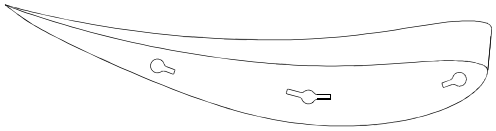

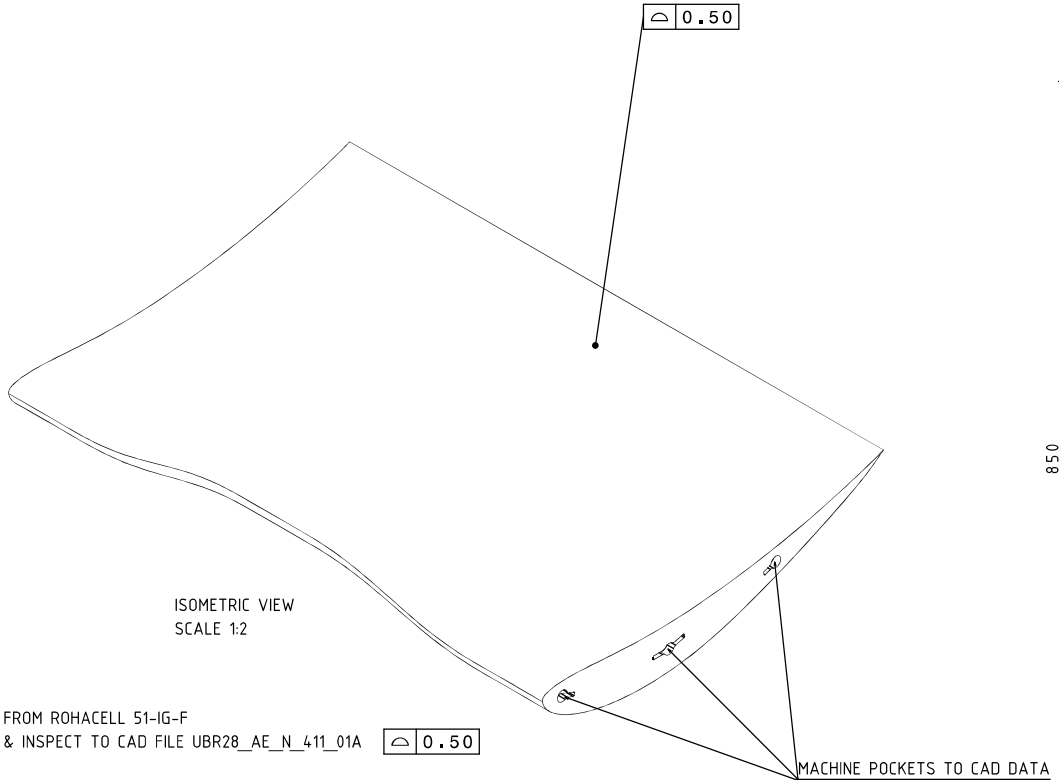

ISOMETRIC VIEW
SCALE 1:2

(1:2)

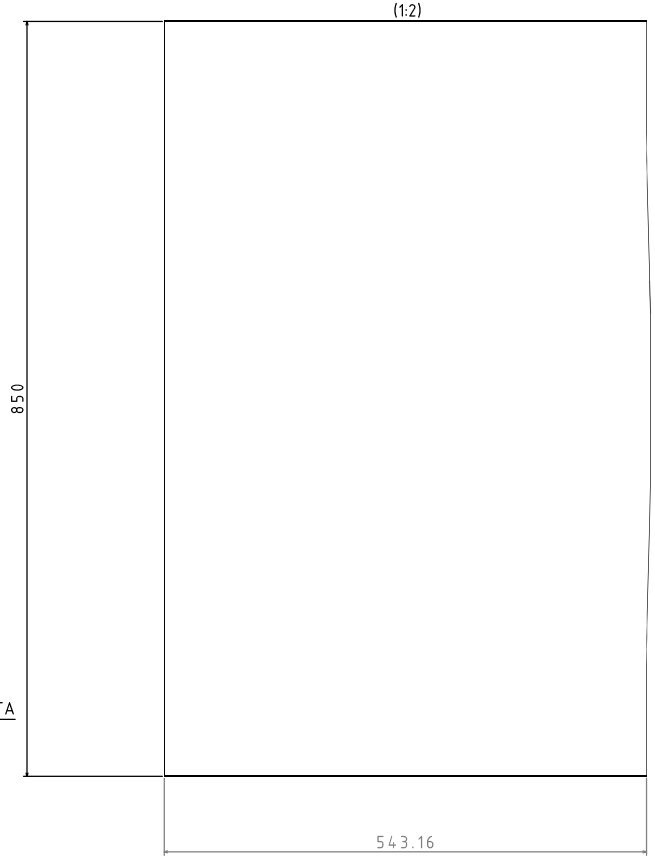

NOTES:

- MACHINE FROM ROHACELL 51-IG-F
- MACHINE & INSPECT TO CAD FILE UBR28_AE_N_411_01A 0.50

	LAMINATE TABLE		
OP NO.	MATERIAL SPEC	ORIENTATION	POSITION
1	CHECK ALL ROHACELL CORE AND INSERTS ARE CLEAN		
2	ROHACELL CORE AND INSERTS	-	-
3	FILM BOND ADHESIVE	-	1 PLY, ALL OVER
4	EPC300-C2/57-HS-3K-43-1250	-	PATCH PLY
5	EPC300-C2/57-HS-3K-43-1250	0/90	1 PLY, ALL OVER
6	MYLAR FILM	-	-
CURE	VACUUM BAG AND CURE, RAMP TO 80C, HOLD FOR 30MIN, RAMP TO 120C, HOLD FOR 120MIN, RAMP DOWN		

UBRacing

A0

IF IN DOUBT - ASK

DO NOT SCALE

TEL. +44 (0)121 414 4218

E-MAIL. ubracing@gmail.com

MATERIAL CERTIFICATE REQUIRED

DIMENSIONS IN MILIMETRES U.O.S

0 DECIMAL PLACES	±0.50
1 DECIMAL PLACE	±0.25
2 DECIMAL PLACES	±0.10
3 DECIMAL PLACES	±0.02
GENERAL CONCENTRICITY	0.1 TIR
ANGULAR TOLERANCE	±0.25°

REMOVE BURRS AND SHARP EDGES

COMPONENT MASS (kg): N/A

DRAWN BY: RGA

CHECKED BY: JDH

MATERIAL SPEC	COMPOSITE
HEAT TREATMENT	N/A
SURFACE TREATMENT	N/A
DESCRIPTION	REAR WING MAIN ELEMENT

This drawing and the copyright herein are the property of UBRacing. It is private & confidential and is issued on the express condition that it is not modified, copied or communicated to any other party without the written consent of UBRacing.

SCALE 1:2

SHEET 1/1

PART NUMBER UBR28_AE_N_411_01A

REV	DESCRIPTION	INIT	DATE
01A	INITIAL RELEASE	PEF	19/11/2024

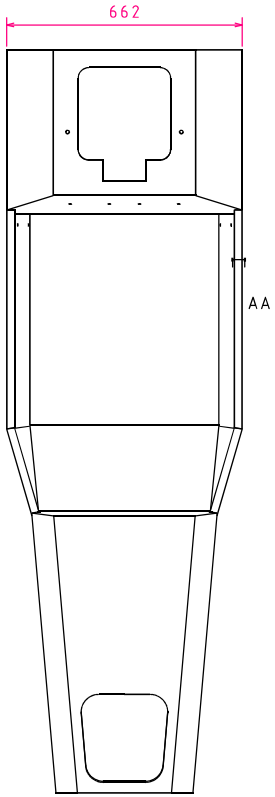

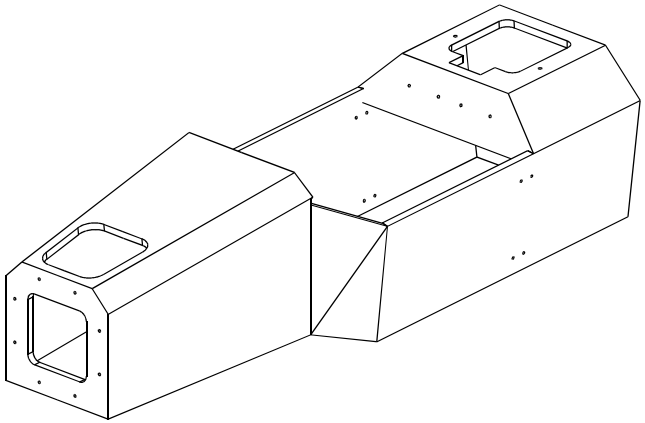

LAMINATE TABLE			
OP NO.	MATERIAL SPECIFICATION	ORIENTATION	POSITION
10	CHECK ALL TOOLING IS CORRECT & RELEASED		
20	EPC300-C280T-HS-3K-42-1250	0/90	1 PLY, ALL OVER
30	DEBULK FOR 60 MINUTES		
40	EPC300-C280T-HS-3K-42-1250	45	1 PLY, ALL OVER
50	DEBULK FOR 60 MINUTES		
60	EPC300-C280T-HS-3K-42-1250	0/90	1 PLY, ALL OVER
70	DEBULK FOR 60 MINUTES		
80	EPC300-C280T-HS-3K-42-1250	45	1 PLY, ALL OVER
90	DEBULK FOR 60 MINUTES		
100	FILM BOND ADHESIVE	-	1 PLY, ALL OVER
110	20MM ALUMINIUM HONEYCOMB CORE	-	-
120	FIT INSERTS AND LOCATE USING RESIN PINS		
130	FILM BOND ADHESIVE	-	1 PLY ALL, OVER
140	EPC300-C280T-HS-3K-42-1250	45	1 PLY, ALL OVER
150	DEBULK FOR 60 MINUTES		
160	EPC300-C280T-HS-3K-42-1250	0/90	1 PLY, ALL OVER
170	DEBULK FOR 60 MINUTES		
180	EPC300-C280T-HS-3K-42-1250	45	1 PLY, ALL OVER
190	DEBULK FOR 60 MINUTES		
200	EPC300-C280T-HS-3K-42-1250	0/90	1 PLY, ALL OVER
210	PEEL PLY	-	-
CURE	VACUUM BAG AND CURE: RAMP UP TO 100C AND 1.6 BAR, HOLD FOR 240 MINS, RAMP DOWN		

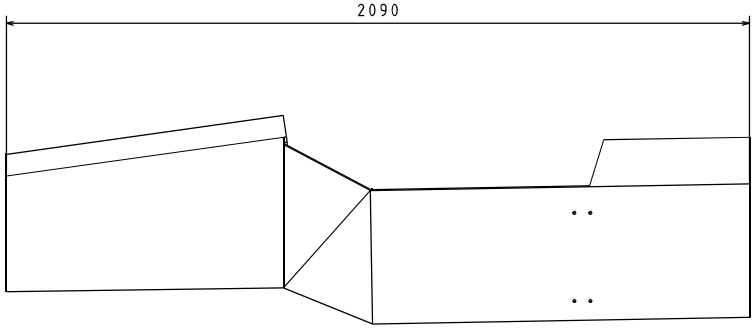

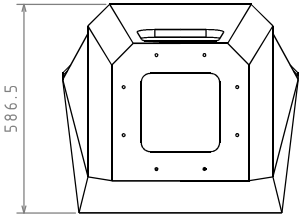

A-A
(NOT TO SCALE)
WHOLE CAR EXCEPT FBH

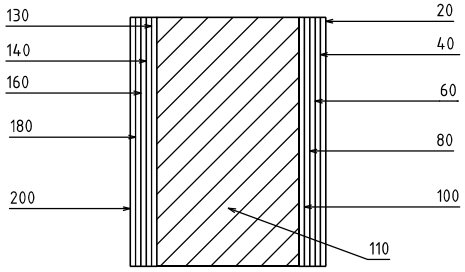

NOTES:
SEE FBH DRAWING FOR FBH LAYUP

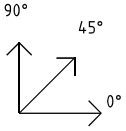

UBRacing	MATERIAL CERTIFICATE REQUIRED DIMENSIONS IN MILIMETRES U.O.S	COMPONENT MASS (kg)	-	MATERIAL SPEC	SEE LAMINATE TABLE
				HEAT TREATMENT	N/A
A2	IF IN DOUBT - ASK DO NOT SCALE	DRAWN BY	PEF	SURFACE TREATMENT	N/A
	0 DECIMAL PLACES ±0.50 1 DECIMAL PLACE ±0.25 2 DECIMAL PLACES ±0.10 3 DECIMAL PLACES ±0.02 GENERAL CONCENTRICITY 0.1 TIR ANGULAR TOLERANCE ±0.25°			DESCRIPTION	MONOCOQUE
TEL.	+44 (0)121 414 4218				
E-MAIL.	ubracing@gmail.com				
	REMOVE BURRS AND SHARP EDGES	SCALE	1:10	SHEET 1/1	PART NUMBER UBR28_CH_N_001_01A

This drawing and the copyright herein are the property of UBRacing. It is private & confidential and is issued on the express condition that it is not modified,copied or communicated to any other party without the written consent of UBRacing.

REV	DESCRIPTION	INIT	DATE
01A	INITIAL RELEASE	WS	20/03/2025

PARTS LIST			
PART NUMBER	DESCRIPTION	QUANTITY	BALLOON
UBR28_CH_N_011_01A	MAIN ROLL HOOP (MRH)	1	001
UBR28_CH_N_015_01A	MRH SUPPORT	2	002
UBR28_CH_N_012_01A	BOSS TUBE	2	003
UBR28_CH_N_013_01A	BOSS PLATE	2	004
UBR28_CH_N_014_01A	MRH BRACKET	4	005

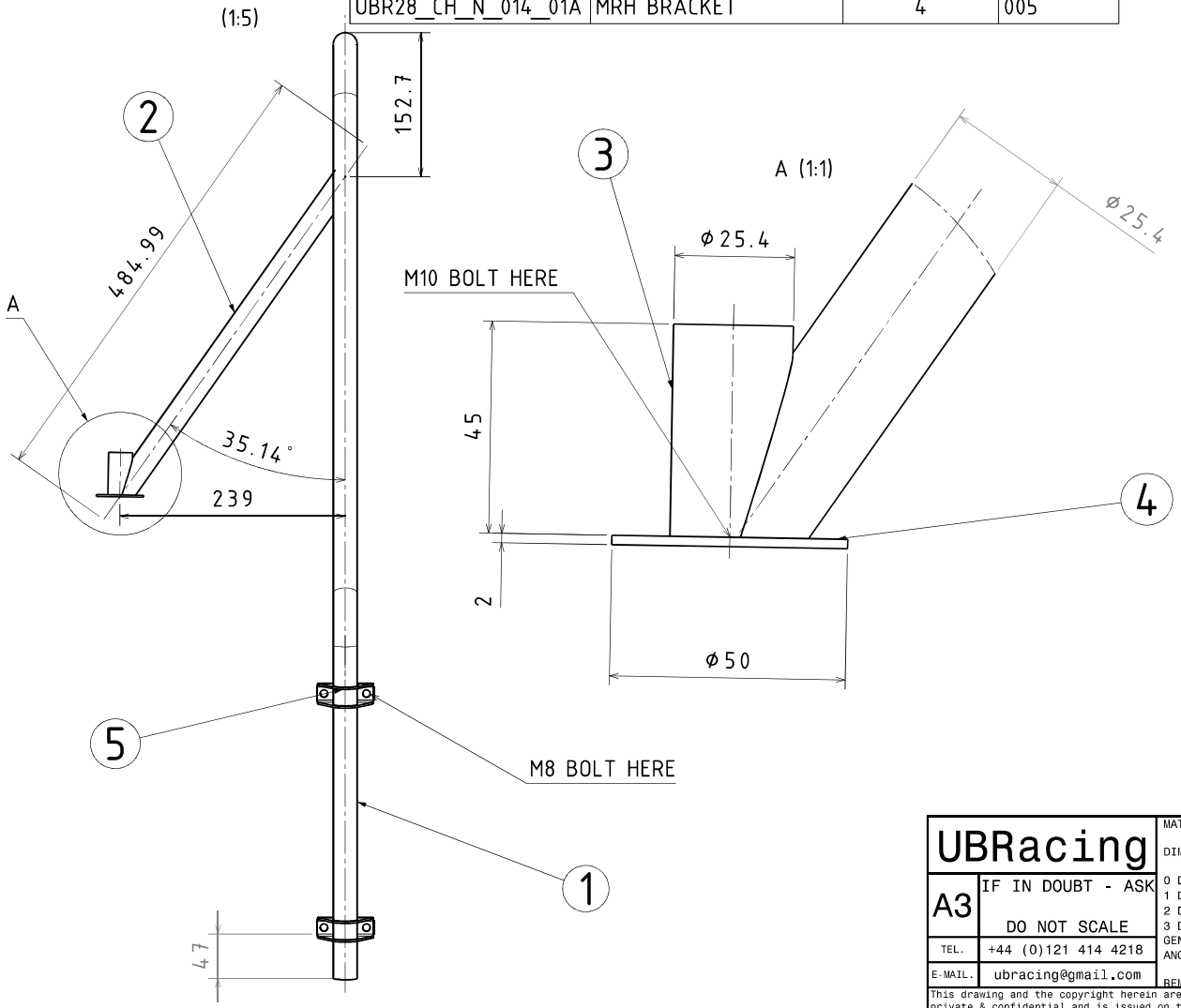

NOTES:

1. WELD 003 TO 004, AS SEEN IN DRAWING

2. SLIDE 005 ONTO 001

3. BOLT 005,001 ASSEMBLY TO THE CHASSIS ENSURING DISTANCE TO BOTTOM OF 001 FROM BOTTOM OF 005 IS 47 MM

4. TIGHTEN 005 TO THE CHASSIS

5. TACK 001 TO 005

6. BOLT AND TIGHTEN 003,004 ASSEMBLY TO THE CHASSIS

7. PROFILE 002 TO FIT BETWEEN 003,004 ASSEMBLY AND 001, ENSURING ANGLE BETWEEN 001 AND 002 EXCEEDS 30 DEGREES. ALSO ENSURE DISTANCE FROM TOP OF 001 TO WHERE 002 ATTACHES TO 001 DOES NOT EXCEED 155 MM

8. SEAM WELD 002 TO 003,004 ASSEMBLY AND 001

UBRacing

A3

IF IN DOUBT - ASK

DO NOT SCALE

TEL. +44 (0)121 414 4218

E-MAIL. ubracing@gmail.com

MATERIAL CERTIFICATE REQUIRED

DIMENSIONS IN MILIMETRES U.O.S

0 DECIMAL PLACES	±0.50
1 DECIMAL PLACE	±0.25
2 DECIMAL PLACES	±0.10
3 DECIMAL PLACES	±0.02
GENERAL CONCENTRICITY	0.1 TIR
ANGULAR TOLERANCE	±0.25°

REMOVE BURRS AND SHARP EDGES

This drawing and the copyright herein are the property of UBRacing. It is private & confidential and is issued on the express condition that it is not modified,copied or communicated to any other party without the written consent of UBRacing.

COMPONENT MASS (kg)	3.42	MATERIAL SPEC	T45 MILD STEEL
		HEAT TREATMENT	N/A
DRAWN BY	WJS	SURFACE TREATMENT	POWDER COATED
		DESCRIPTION	MAIN ROLL HOOP ASSEMBLY
SCALE	1:5	SHEET	1/1
		PART NUMBER	UBR28_CH_N_003_01A

REV	DESCRIPTION	INIT	DATE
01A	INITIAL RELEASE	WS	06/02/2025

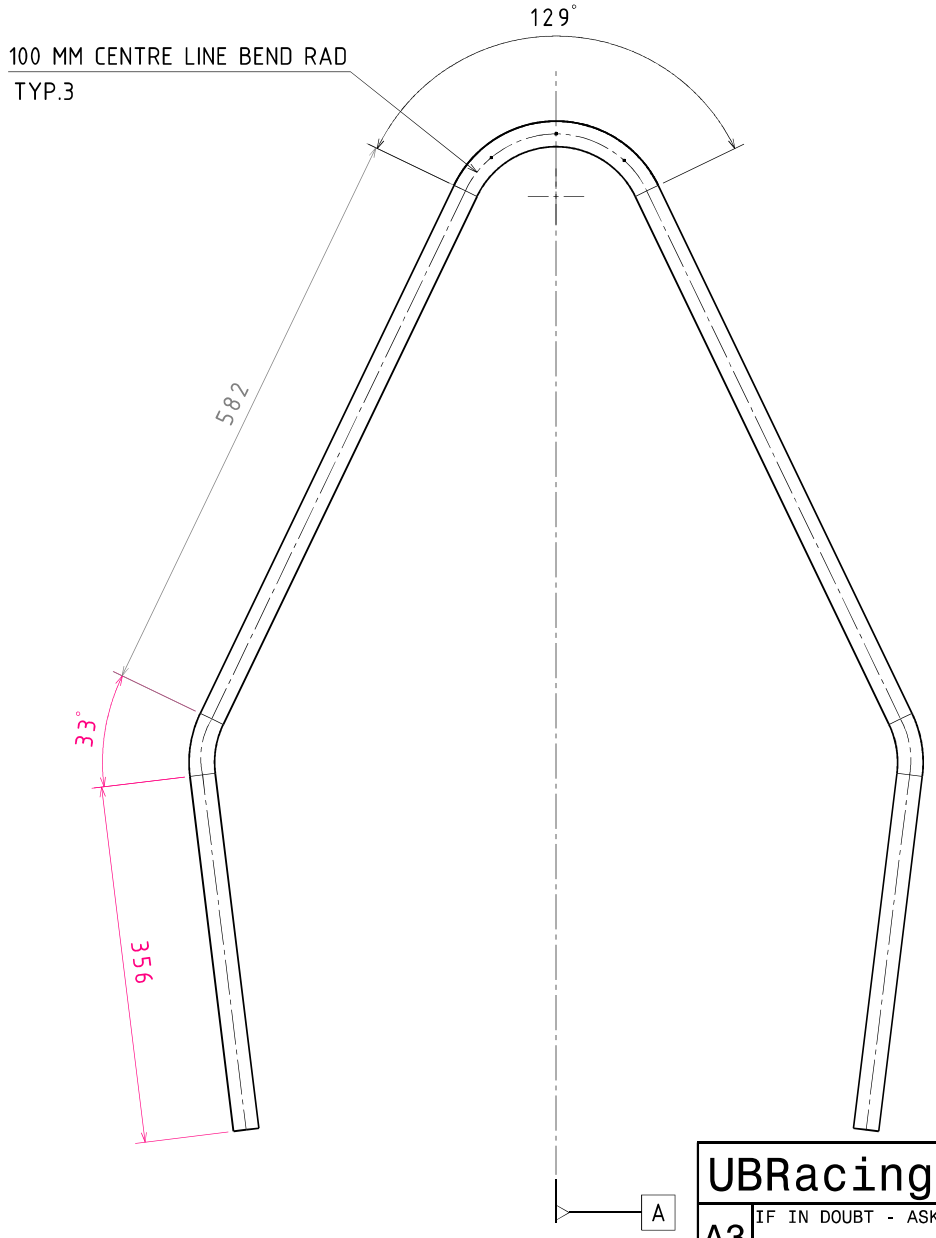

NOTES:

1. PART SYMMETRICAL ABOUT A
2. TUBE LENGTH 2215 MM
3. 1"O/D 12 SWG SEAMLESS TUBE

UBRacing

A3

IF IN DOUBT - ASK

DO NOT SCALE

TEL. +44 (0)121 414 4218

E-MAIL. ubracing@gmail.com

MATERIAL CERTIFICATE REQUIRED

DIMENSIONS IN MILIMETRES U.O.S

0 DECIMAL PLACES	±0.50
1 DECIMAL PLACE	±0.25
2 DECIMAL PLACES	±0.10
3 DECIMAL PLACES	±0.02
GENERAL CONCENTRICITY	0.1 TIR
ANGULAR TOLERANCE	±0.25°

REMOVE BURRS AND SHARP EDGES

This drawing and the copyright herein are the property of UBRacing. It is private & confidential and is issued on the express condition that it is not modified,copied or communicated to any other party without the written consent of UBRacing.

COMPONENT MASS (kg)	3.42
DRAWN BY	WJS
SCALE	1:5
MATERIAL SPEC	T45 MILD STEEL
HEAT TREATMENT	N/A
SURFACE TREATMENT	POWDER COATED
DESCRIPTION	MAIN ROLL HOOP
SHEET	1/1
PART NUMBER	UBR28_CH_N_011_01A

REV	DESCRIPTION	INIT	DATE
01A	INITIAL RELEASE	KC	17/12/24

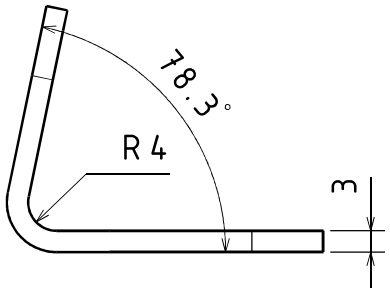

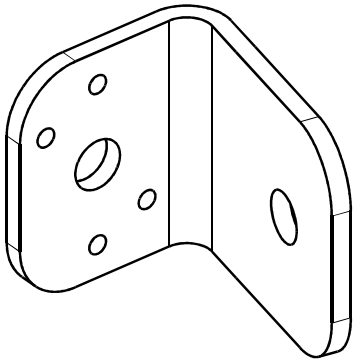

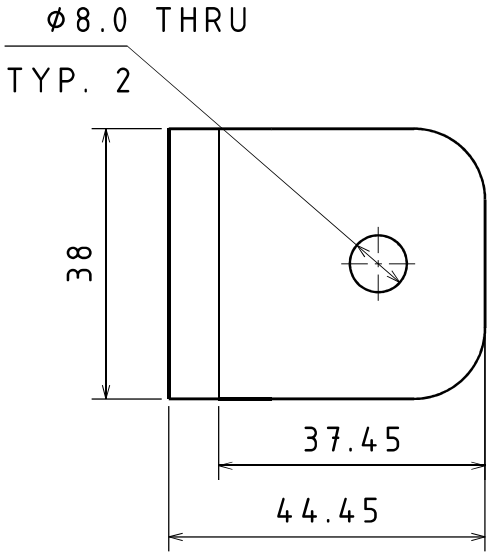

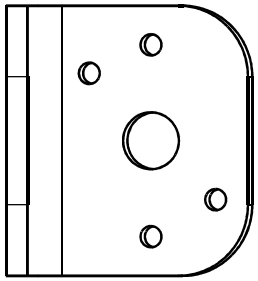

OUTER SIDE VIEW

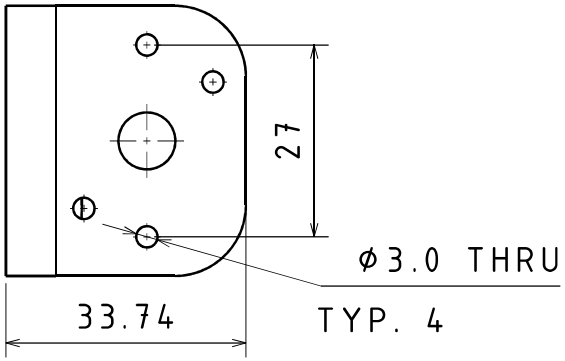

UBRacing	MATERIAL CERTIFICATE REQUIRED DIMENSIONS IN MILIMETRES U.O.S	COMPONENT MASS (kg)	-	MATERIAL SPEC	ALUMINIUM
				HEAT TREATMENT	N/A
A4	IF IN DOUBT - ASK DO NOT SCALE	DRAWN BY	KC	SURFACE TREATMENT	ANODISED
	0 DECIMAL PLACES ±0.50 1 DECIMAL PLACE ±0.25 2 DECIMAL PLACES ±0.10 3 DECIMAL PLACES ±0.02 GENERAL CONCENTRICITY 0.1 TIR ANGULAR TOLERANCE ±0.25°			DESCRIPTION	NOSECONE DZUS FASTENER BRACKET
TEL.	+44 (0)121 414 4218				
E-MAIL.	ubracing@gmail.com				
	REMOVE BURRS AND SHARP EDGES				
		SCALE	1:1	SHEET 1/1	PART NUMBER UBR28_CH_N_016_01A

This drawing and the copyright herein are the property of UBRacing. It is private & confidential and is issued on the express condition that it is not modified, copied or communicated to any other party without the written consent of UBRacing.

REV	DESCRIPTION	INIT	DATE
01A	INITIAL RELEASE	SK	18/11/2024

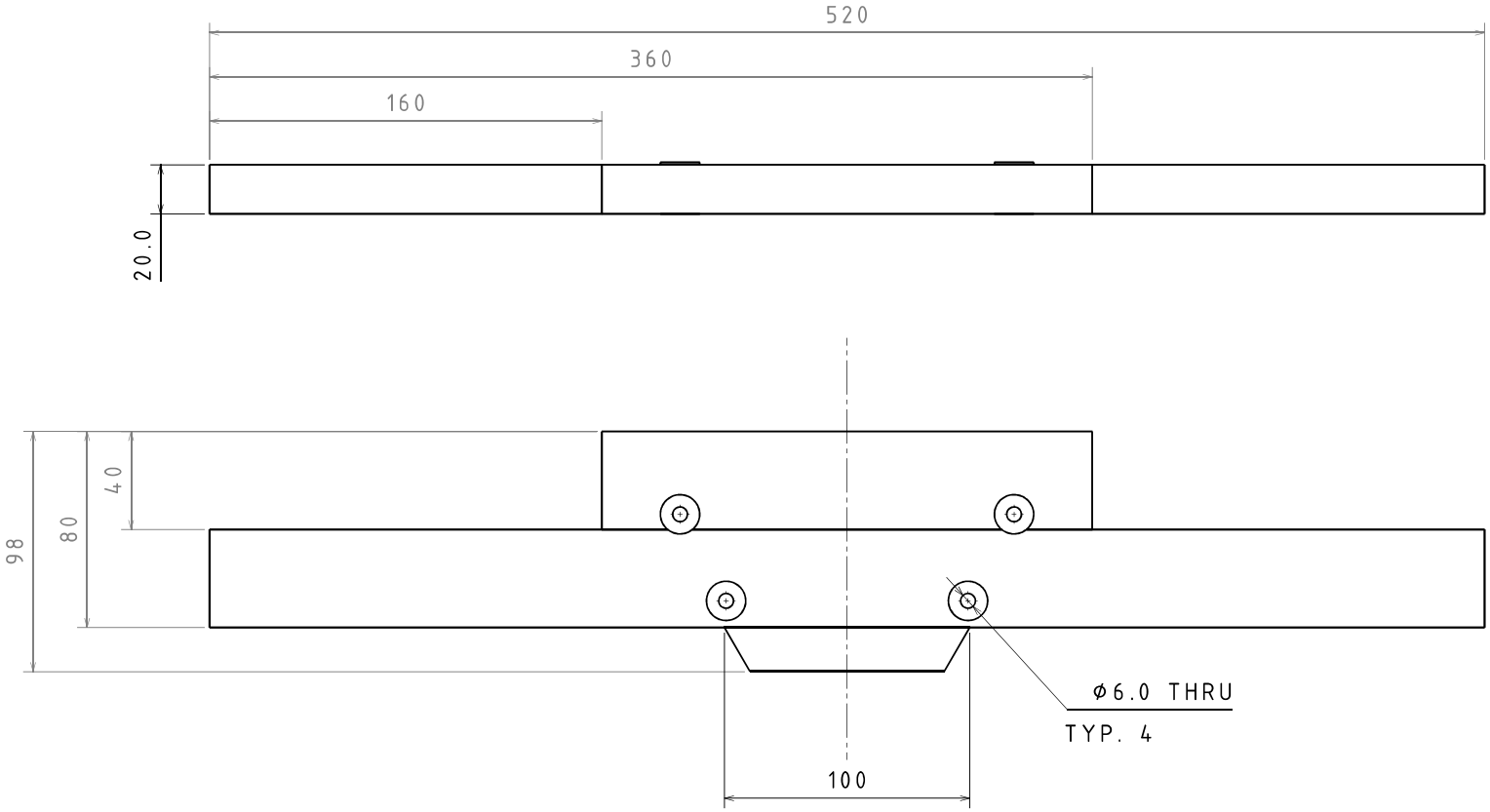

UBRacing

A3

IF IN DOUBT - ASK

DO NOT SCALE

TEL. +44 (0)121 414 4218

E-MAIL. ubracing@gmail.com

MATERIAL CERTIFICATE REQUIRED

DIMENSIONS IN MILIMETRES U.O.S

0 DECIMAL PLACES	±0.50
1 DECIMAL PLACE	±0.25
2 DECIMAL PLACES	±0.10
3 DECIMAL PLACES	±0.02
GENERAL CONCENTRICITY	0.1 TIR
ANGULAR TOLERANCE	±0.25°

REMOVE BURRS AND SHARP EDGES

This drawing and the copyright herein are the property of UBRacing. It is private & confidential and is issued on the express condition that it is not modified,copied or communicated to any other party without the written consent of UBRacing.

COMPONENT MASS (kg)	N/A
DRAWN BY	SK
SCALE	1:1
MATERIAL SPEC	ALUMINIUM
HEAT TREATMENT	N/A
SURFACE TREATMENT	N/A
DESCRIPTION	DASH INSERT
SHEET	1/1
PART NUMBER	UBR28_CH_N_529_01A

REV	DESCRIPTION	INIT	DATE
01A	INITIAL RELEASE	DH	22/11/2024

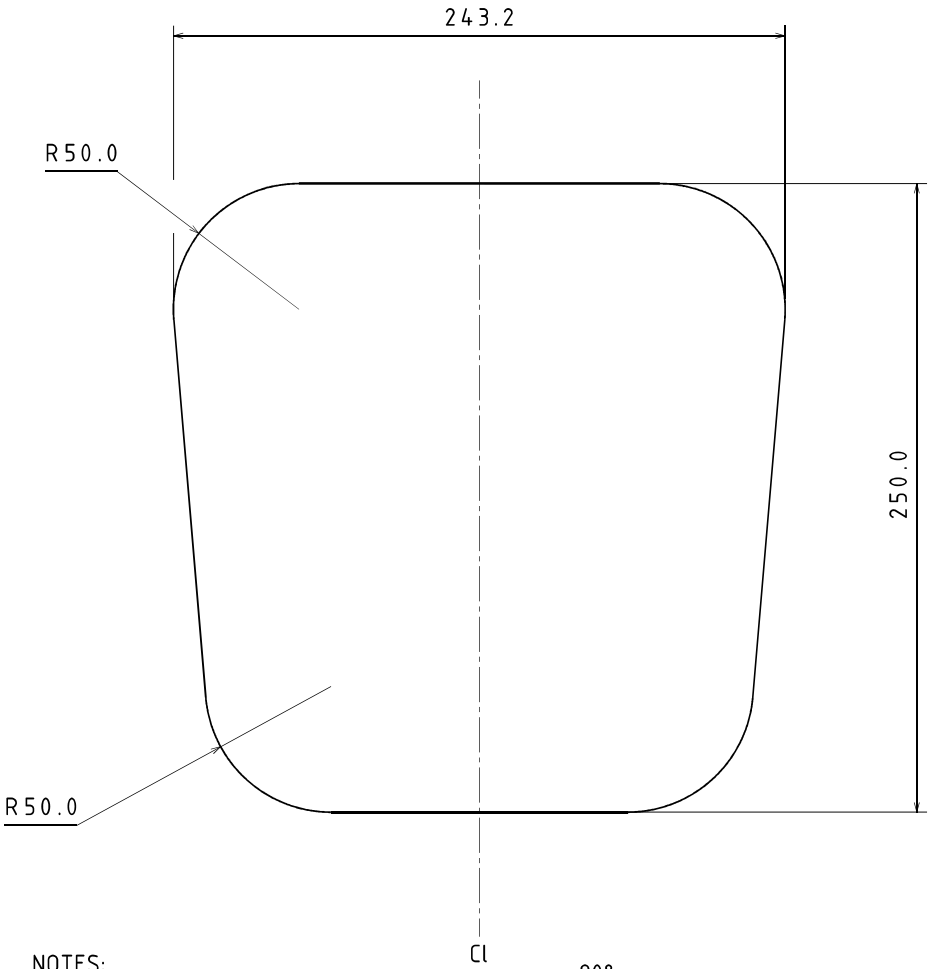

	LAMINATE TABLE		
OP NO.	MATERIAL SPECIFICATION	ORIENTATION	POSITION
10	CHECK ALL TOOLING IS CORRECT & RELEASED		
20	EPC300-C280T-HS-3K-42-1250	0/90	2 PLY, ALL OVER
30	FILM BOND ADHESIVE	-	1 PLY, ALL OVER
40	3 MM PLYWOOD CORE	-	-
50	FILM BOND ADHESIVE	-	1 PLY, ALL OVER
60	EPC300-C280T-HS-3K-42-1250	0/90	1 PLY, ALL OVER
70	PEEL PLY	-	-
CURE	VACUUM BAG AND CURE; RAMP UP TO 80C, HOLD FOR 30MINS, RAMP UP TO 120C HOLD FOR 120MINS, RAMP DOWN		

NOTES:
SYMMETRICAL ABOUT CENTRE LINE

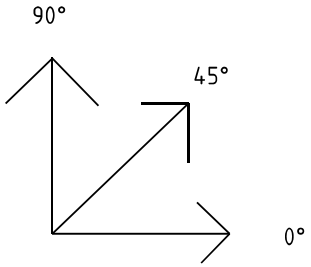

UBRacing

A3

IF IN DOUBT - ASK

DO NOT SCALE

TEL. +44 (0)121 414 4218
E-MAIL. ubracing@gmail.com

MATERIAL CERTIFICATE REQUIRED

DIMENSIONS IN MILIMETRES U.O.S

0 DECIMAL PLACES	±0.50
1 DECIMAL PLACE	±0.25
2 DECIMAL PLACES	±0.10
3 DECIMAL PLACES	±0.02
GENERAL CONCENTRICITY	0.1 TIR
ANGULAR TOLERANCE	±0.25°

REMOVE BURRS AND SHARP EDGES

This drawing and the copyright herein are the property of UBRacing. It is private & confidential and is issued on the express condition that it is not modified,copied or communicated to any other party without the written consent of UBRacing.

COMPONENT MASS (kg)	N/A
DRAWN BY	DH
SCALE	1:2
MATERIAL SPEC	SEE LAMINATE TABLE
HEAT TREATMENT	N/A
SURFACE TREATMENT	PAINT
DESCRIPTION	FRONT ACCESS PANEL
SHEET	1/1
PART NUMBER	UBR28_CH_N_706_01A

REV	DESCRIPTION	INIT	DATE
01A	INITIAL RELEASE	SCB	22/11/2024

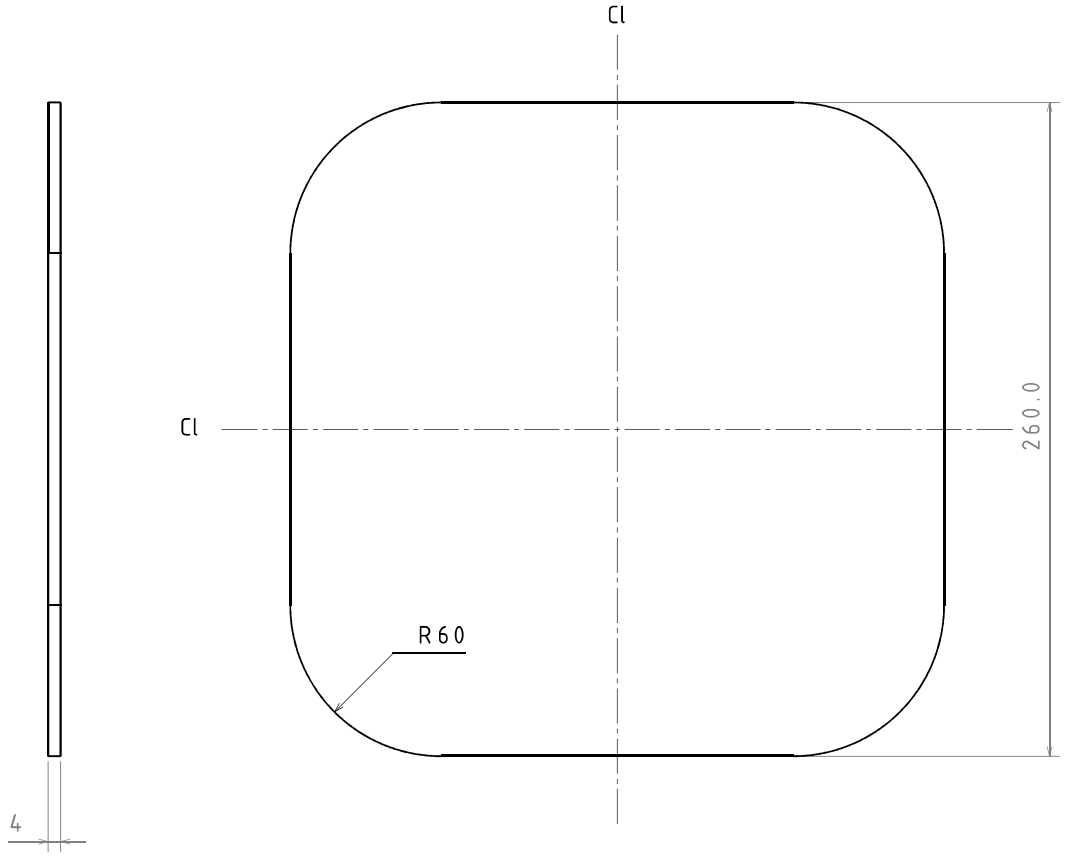

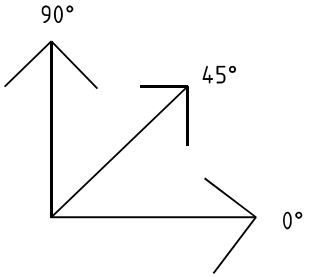

	LAMINATE TABLE		
OP NO.	MATERIAL SPECIFICATION	ORIENTATION	POSITION
1	CHECK ALL TOOLING IS CORRECT AND RELEASED		
2	EPC300-C280T-HS-3K-42-1250	45	2 PLY ALL OVER
3	FILM BOND ADHESIVE	-	1 PLY ALL OVER
4	3 MM PLYWOOD CORE	-	-
5	FILM BOND ADHESIVE	-	1 PLY ALL OVER
6	EPC300-C280T-HS-3K-42-1250	45	1 PLY ALL OVER
7	PEEL PLY	-	-
CURE	VACUUM BAG AND CURE; RAMP UP TO 80C, HOLD FOR 30MINS, RAMP UP TO 120C HOLD FOR 120MINS, RAMP DOWN		

NOTES:
SYMMETRICAL ABOUT CENTRE LINE

UBRacing

A3

IF IN DOUBT - ASK

DO NOT SCALE

TEL. +44 (0)121 414 4218
E-MAIL. ubracing@gmail.com

MATERIAL CERTIFICATE REQUIRED

DIMENSIONS IN MILIMETRES U.O.S

0 DECIMAL PLACES	±0.50
1 DECIMAL PLACE	±0.25
2 DECIMAL PLACES	±0.10
3 DECIMAL PLACES	±0.02
GENERAL CONCENTRICITY	0.1 TIR
ANGULAR TOLERANCE	±0.25°

REMOVE BURRS AND SHARP EDGES

This drawing and the copyright herein are the property of UBRacing. It is private & confidential and is issued on the express condition that it is not modified,copied or communicated to any other party without the written consent of UBRacing.

COMPONENT MASS (kg)	N/A
DRAWN BY	SB
SCALE	1:2
MATERIAL SPEC	SEE LAMINATE TABLE
HEAT TREATMENT	N/A
SURFACE TREATMENT	PAINT
DESCRIPTION	REAR ACCESS PANEL
SHEET	1/1
PART NUMBER	UBR28_CH_N_707_01A

REV	DESCRIPTION	INIT	DATE
01A	INITIAL RELEASE	SK	11/11/2024

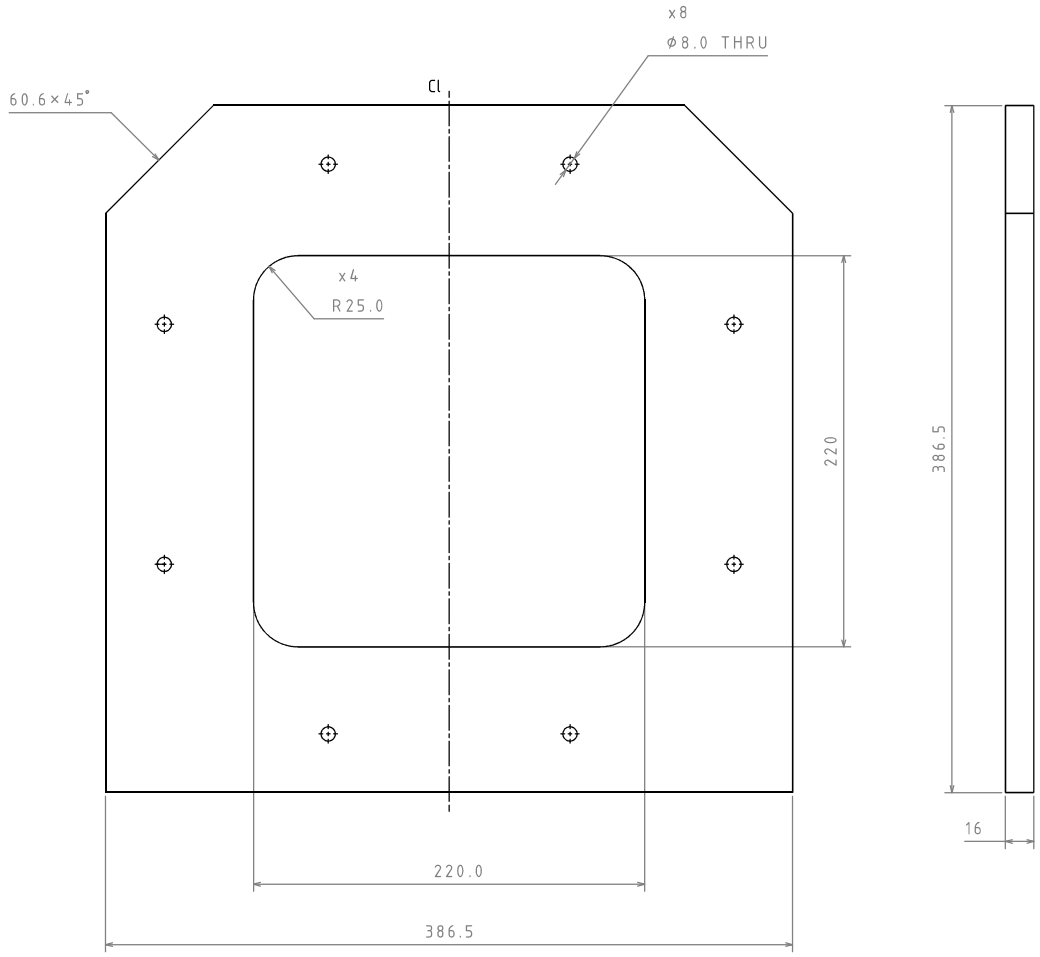

	LAMINATE TABLE		
OP NO.	MATERIAL SPECIFICATION	ORIENTATION	POSITION
10	CHECK ALL TOOLING IS CORRECT AND RELEASED		
20	EPC300-C280T-HS-3K-42-1250	45	1 PLY ALL OVER
30	EPC300-C280T-HS-3K-42-1250	0/90	1 PLY ALL OVER
40	EPC300-C280T-HS-3K-42-1250	45	1 PLY ALL OVER
50	DEBULK FOR 60 MINS		
60	EPC300-C280T-HS-3K-42-1250	90	1 PLY ALL OVER
70	EPC300-C280T-HS-3K-42-1250	45	1 PLY ALL OVER
80	MTC510-UD300-HS-33%RW-300P	0	1 PLY ALL OVER
90	DEBULK FOR 60 MINS		
100	EPC300-C280T-HS-3K-42-1250	45	1 PLY ALL OVER
110	MTC510-UD300-HS-33%RW-300P	90	1 PLY ALL OVER
120	EPC300-C380T-HS-12K-42-1250	45	1 PLY ALL OVER
130	DEBULK FOR 60 MINS		
140	EPC300-C280T-HS-3K-42-1250	90	1 PLY ALL OVER
150	EPC300-C380T-HS-12K-42-1250	45	1 PLY ALL OVER
160	EPC300-C280T-HS-3K-42-1250	90	1 PLY ALL OVER
170	DEBULK FOR 60 MINS		
180	FILM BOND ADHESIVE	-	1 PLY ALL OVER
190	10MM ALUMINIUM HONEYCOMB CORE	-	ALL OVER
200	FIT INSERTS AND LOCATE USING RESIN PINS		
210	FILM BOND ADHESIVE	-	1 PLY ALL OVER
220	EPC300-C280T-HS-3K-42-1250	90	1 PLY ALL OVER
230	EPC300-C380T-HS-12K-42-1250	45	1 PLY ALL OVER
240	EPC300-C280T-HS-3K-42-1250	90	1 PLY ALL OVER
250	DEBULK FOR 60 MINS		
260	EPC300-C380T-HS-12K-42-1250	45	1 PLY ALL OVER
270	MTC510-UD300-HS-33%RW-300P	90	1 PLY ALL OVER
280	EPC300-C280T-HS-3K-42-1250	45	1 PLY ALL OVER
290	DEBULK FOR 60 MINS		
300	MTC510-UD300-HS-33%RW-300P	0	1 PLY ALL OVER
310	EPC300-C280T-HS-3K-42-1250	45	1 PLY ALL OVER
320	EPC300-C280T-HS-3K-42-1250	0/90	1 PLY ALL OVER
330	DEBULK FOR 60 MINS		
340	EPC300-C280T-HS-3K-42-1250	45	1 PLY ALL OVER
350	EPC300-C280T-HS-3K-42-1250	0/90	1 PLY ALL OVER
360	EPC300-C280T-HS-3K-42-1250	45	1 PLY ALL OVER
370	PEEL PLY	-	-
CURE	VACUUM BAG AND CURE: RAMP UP TO 100C AND 1.6 BAR, HOLD FOR 240 MINS, RAMP DOWN		

NOTES:
PART SYMMETRICAL ABOUT CENTRE LINE

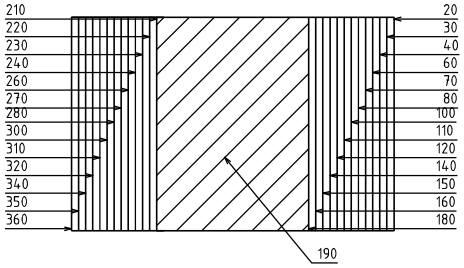

UBRacing	MATERIAL CERTIFICATE REQUIRED DIMENSIONS IN MILIMETRES U.O.S	COMPONENT MASS (kg)	N/A	MATERIAL SPEC	SEE LAMINATE TABLE
				HEAT TREATMENT	N/A
A2	IF IN DOUBT - ASK DO NOT SCALE	DRAWN BY	SK	SURFACE TREATMENT	N/A
	0 DECIMAL PLACES ±0.50 1 DECIMAL PLACE ±0.25 2 DECIMAL PLACES ±0.10 3 DECIMAL PLACES ±0.02 GENERAL CONCENTRICITY 0.1 TIR ANGULAR TOLERANCE ±0.25°			DESCRIPTION	FRONT BULKHEAD
TEL.	+44 (0)121 414 4218				
E-MAIL.	ubracing@gmail.com				
	REMOVE BURRS AND SHARP EDGES	SCALE	1:1	SHEET 1/1	PART NUMBER UBR28_CH_N_FBH_01A

This drawing and the copyright herein are the property of UBRacing. It is private & confidential and is issued on the express condition that it is not modified,copied or communicated to any other party without the written consent of UBRacing.

REV	DESCRIPTION	INIT	DATE
01A	INITIAL RELEASE	PEF	22/11/2024

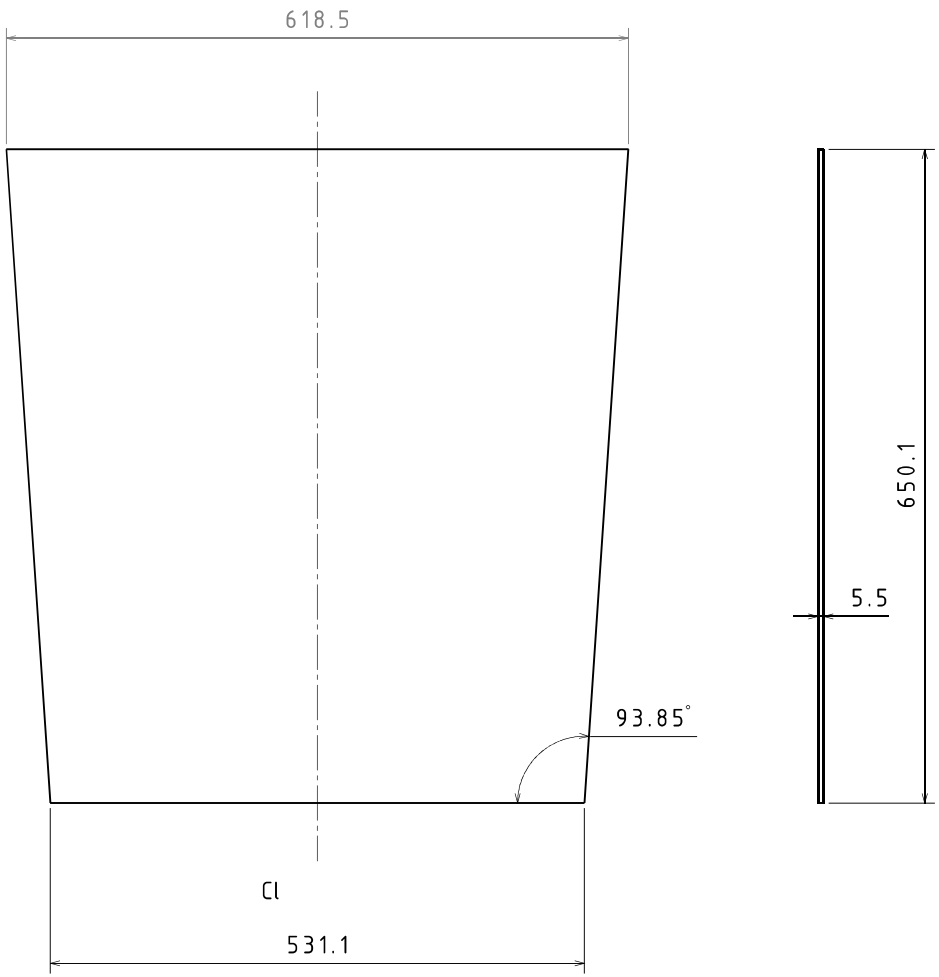

LAMINATE TABLE			
OP NO.	MATERIAL SPECIFICATION	ORIENTATION	POSITION
10	CHECK ALL TOOLING IS CORRECT & RELEASED		
20	EPC312FR-C205T-HS-3K-45-1250	0/90	1 PLY, ALL OVER
30	EPC312FR-C205T-HS-3K-45-1250	45	1 PLY, ALL OVER
40	EPC312FR-C205T-HS-3K-45-1250	0/90	1 PLY, ALL OVER
50	FILM BOND ADHESIVE	-	1 PLY, ALL OVER
60	5 MM NOMEX HONEYCOMB	-	-
70	FILM BOND ADHESVIVE	-	-
80	EPC312FR-C205T-HS-3K-45-1250	0/90	1 PLY, ALL OVER
90	EPC312FR-C205T-HS-3K-45-1250	45	1 PLY, ALL OVER
100	EPC312FR-C205T-HS-3K-45-1250	0/90	1 PLY, ALL OVER
CURE	VACUUM BAG AND CURE: RAMP UP TO 80C, HOLD FOR 30 MINS, RAMP UP TO 120C, HOLD FOR 60 MINS, RAMP DOWN		
110	BOND 0.9 MM ALUMINIUM SHEET TO BACK OF KEVLAR USING MT3836		
120	ADD D-RING ON THE EDGES		

NOTES:
PART SYMMETRICAL ABOUT CENTRE LINE

UBRacing

A3

IF IN DOUBT - ASK

DO NOT SCALE

TEL. +44 (0)121 414 4218
E-MAIL. ubracing@gmail.com

MATERIAL CERTIFICATE REQUIRED

DIMENSIONS IN MILIMETRES U.O.S

0 DECIMAL PLACES	±0.50
1 DECIMAL PLACE	±0.25
2 DECIMAL PLACES	±0.10
3 DECIMAL PLACES	±0.02
GENERAL CONCENTRICITY	0.1 TIR
ANGULAR TOLERANCE	±0.25°

REMOVE BURRS AND SHARP EDGES

This drawing and the copyright herein are the property of UBRacing. It is private & confidential and is issued on the express condition that it is not modified,copied or communicated to any other party without the written consent of UBRacing.

COMPONENT MASS (kg)	N/A
DRAWN BY	PEF
SCALE	1:5
MATERIAL SPEC	SEE LAMINATE TABLE
HEAT TREATMENT	N/A
SURFACE TREATMENT	N/A
DESCRIPTION	FIREWALL
SHEET	1/1
PART NUMBER	UBR28_CH_N_FIREWALL_01A

REV	DESCRIPTION	INIT	DATE
01A	INITIAL RELEASE	KC	14/12/2024

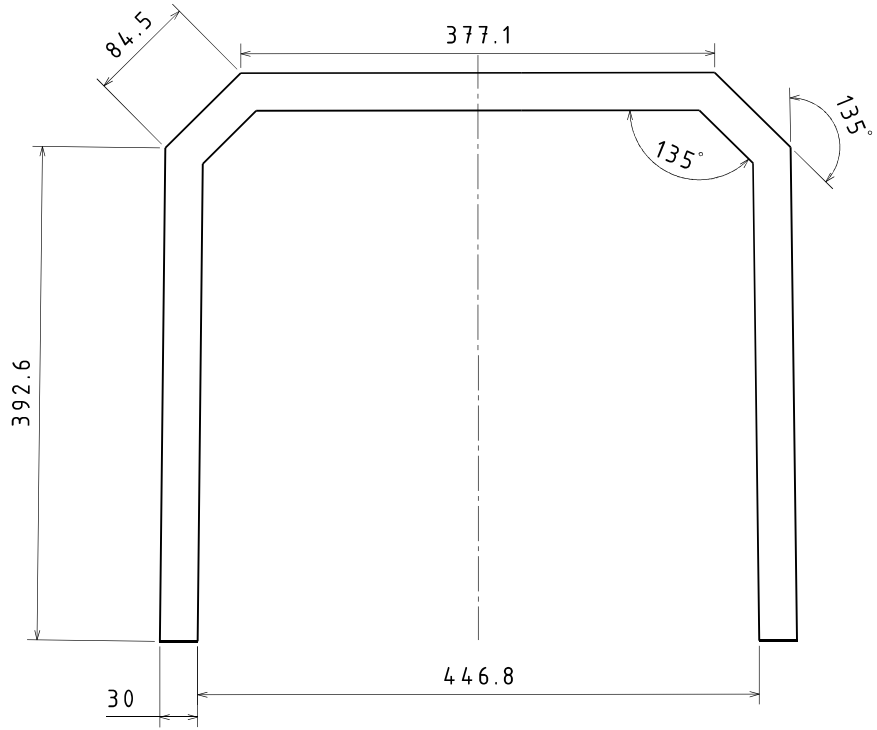

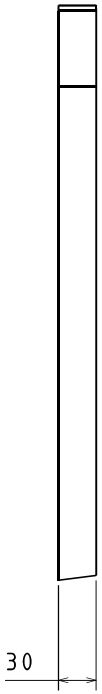

UBRacing

A3

IF IN DOUBT - ASK

DO NOT SCALE

TEL. +44 (0)121 414 4218

E-MAIL. ubracing@gmail.com

MATERIAL CERTIFICATE REQUIRED

DIMENSIONS IN MILIMETRES U.O.S

0 DECIMAL PLACES	±0.50
1 DECIMAL PLACE	±0.25
2 DECIMAL PLACES	±0.10
3 DECIMAL PLACES	±0.02
GENERAL CONCENTRICITY	0.1 TIR
ANGULAR TOLERANCE	±0.25°

REMOVE BURRS AND SHARP EDGES

This drawing and the copyright herein are the property of UBRacing. It is private & confidential and is issued on the express condition that it is not modified,copied or communicated to any other party without the written consent of UBRacing.

COMPONENT MASS (kg)	1.127
DRAWN BY	KC
CHECKED BY	JH
SCALE	1:4
MATERIAL SPEC	ALUMINIUM 6063 BOX SECTION
HEAT TREATMENT	T6
SURFACE TREATMENT	N/A
DESCRIPTION	UBR28 FRONT ROLL HOOP
SHEET	1/1
PART NUMBER	UBR28_CH_N_FRH_01A

REV	DESCRIPTION	INIT	DATE
01A	INITIAL RELEASE	SCB	23/11/2024

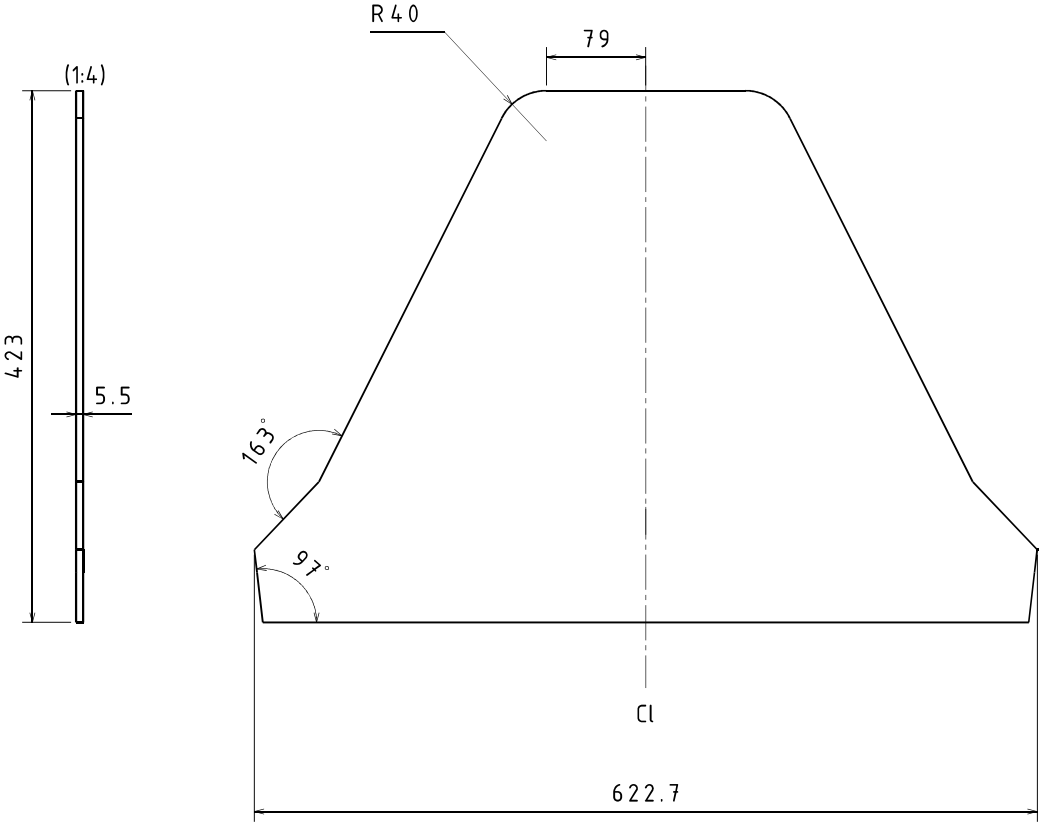

	LAMINATE TABLE		
OP NO.	MATERIAL SPECIFICATION	ORIENTATION	POSITION
10	CHECK ALL TOOLING IS CORRECT AND RELEASED		
20	EPC312FR-C205T-HS-3K-45-1250	45	1 PLY ALL OVER
30	EPC312FR-C205T-HS-3K-45-1250	0/90	1 PLY ALL OVER
40	EPC312FR-C205T-HS-3K-45-1250	45	1 PLY ALL OVER
50	FILM BOND ADHESIVE	-	1 PLY ALL OVER
60	5 MM NOMEX HONEYCOMB	-	-
70	FIT INSERTS AND LOCATE USING RESIN PINS		
80	FILM BOND ADHESIVE	-	1 PLY ALL OVER
90	EPC312FR-C205T-HS-3K-45-1250	45	1 PLY ALL OVER
100	EPC312FR-C205T-HS-3K-45-1250	90	1 PLY ALL OVER
110	EPC312FR-C205T-HS-3K-45-1250	45	1 PLY ALL OVER
120	PEEL PLY	-	-
CURE	VACCUM BAG AND CURE; RAMP UP TO 80C, HOLD FOR 30MINS, RAMP UP TO 120C HOLD FOR 120MINS, RAMP DOWN		
130	BOND 0.9 MM ALUMINIUM SHEET TO BACK OF KEVLAR USING MT3836		
140	ADD D-RING ON THE EDGES		

NOTES:
SYMMETRICAL ABOUT CENTRELINE (Cl)

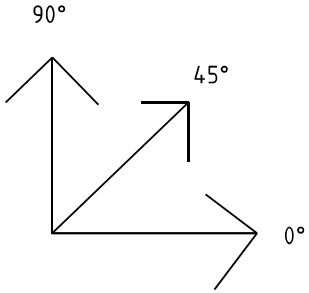

UBRacing

A3

IF IN DOUBT - ASK

DO NOT SCALE

TEL. +44 (0)121 414 4218
E-MAIL. ubracing@gmail.com

MATERIAL CERTIFICATE REQUIRED

DIMENSIONS IN MILIMETRES U.O.S

0 DECIMAL PLACES	±0.50
1 DECIMAL PLACE	±0.25
2 DECIMAL PLACES	±0.10
3 DECIMAL PLACES	±0.02
GENERAL CONCENTRICITY	0.1 TIR
ANGULAR TOLERANCE	±0.25°

REMOVE BURRS AND SHARP EDGES

This drawing and the copyright herein are the property of UBRacing. It is private & confidential and is issued on the express condition that it is not modified,copied or communicated to any other party without the written consent of UBRacing.

COMPONENT MASS (kg)	N/A	MATERIAL SPEC	SEE LAMINATE TABLE
		HEAT TREATMENT	N/A
DRAWN BY	SB	SURFACE TREATMENT	N/A
		DESCRIPTION	HEADREST
SCALE	1:2	SHEET 1/1	PART NUMBER UBR28_CH_N_HEADREST_01A

REV	DESCRIPTION	INIT	DATE
01A	INITIAL RELEASE	LPT	10/06/25

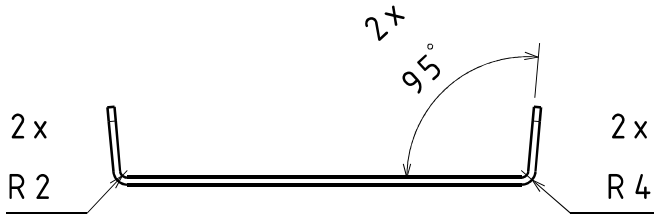

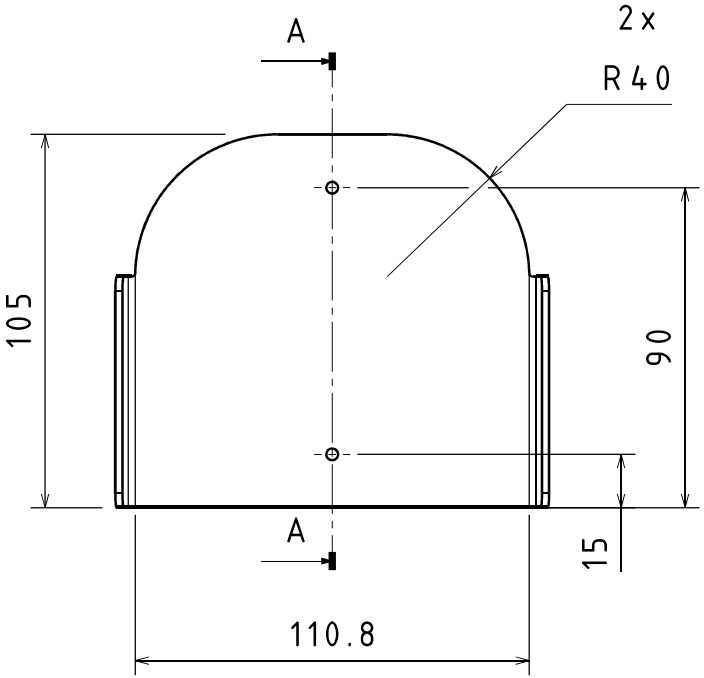

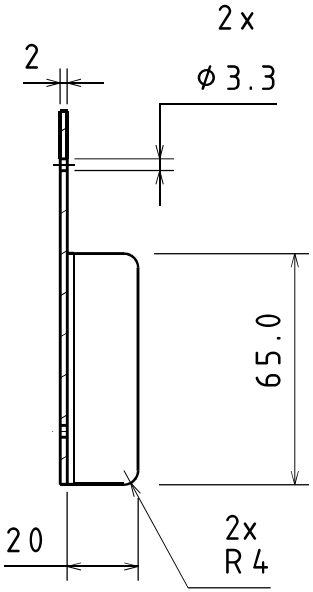

SECTION A-A

LAMINATE TABLE

OP NO.	MATERIAL SPECIFICATION	ORIENTATION	POSITION
CHECK ALL TOOLING IS CORRECT AND RELEASED			
10	EPC300-C280T-HS-3K-42-1250	45	1 PLY ALL OVER
20	EPC300-C280T-HS-3K-42-1250	0/90	1 PLY ALL OVER
30	EPC300-C280T-HS-3K-42-1250	45	1 PLY ALL OVER
40	EPC300-C280T-HS-3K-42-1250	0/90	1 PLY ALL OVER
50	EPC300-C280T-HS-3K-42-1250	45	1 PLY ALL OVER
60	EPC300-C280T-HS-3K-42-1250	0/90	1 PLY ALL OVER
70	EPC300-C280T-HS-3K-42-1250	45	1 PLY ALL OVER
80	PEEL PLY	-	-
VACUUM BAG AND CURE; RAMP UP TO 80C, HOLD FOR 30 MINS, RAMP UP TP 120C HOLD FOR 120 MINS, RAMP DOWN			

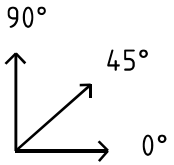

UBRacing

A4

IF IN DOUBT - ASK

DO NOT SCALE

TEL. +44 (0)121 414 4218

E-MAIL. ubracing@gmail.com

MATERIAL CERTIFICATE REQUIRED

DIMENSIONS IN MILIMETRES U.O.S

0 DECIMAL PLACES	±0.50
1 DECIMAL PLACE	±0.25
2 DECIMAL PLACES	±0.10
3 DECIMAL PLACES	±0.02
GENERAL CONCENTRICITY	0.1 TIR
ANGULAR TOLERANCE	±0.25°

REMOVE BURRS AND SHARP EDGES

This drawing and the copyright herein are the property of UBRacing. It is private & confidential and is issued on the express condition that it is not modified, copied or communicated to any other party without the written consent of UBRacing.

COMPONENT MASS (kg)	N/A
DRAWN BY	LPT
SCALE	1:1
MATERIAL SPEC	SEE LAMINATE TABLE
HEAT TREATMENT	N/A
SURFACE TREATMENT	N/A
DESCRIPTION	TOE CAP
SHEET	1/1
PART NUMBER	UBR28_PB_N_001_01A

REV	DESCRIPTION	INIT	DATE
01A	INITIAL RELEASE	LPT	12/06/25

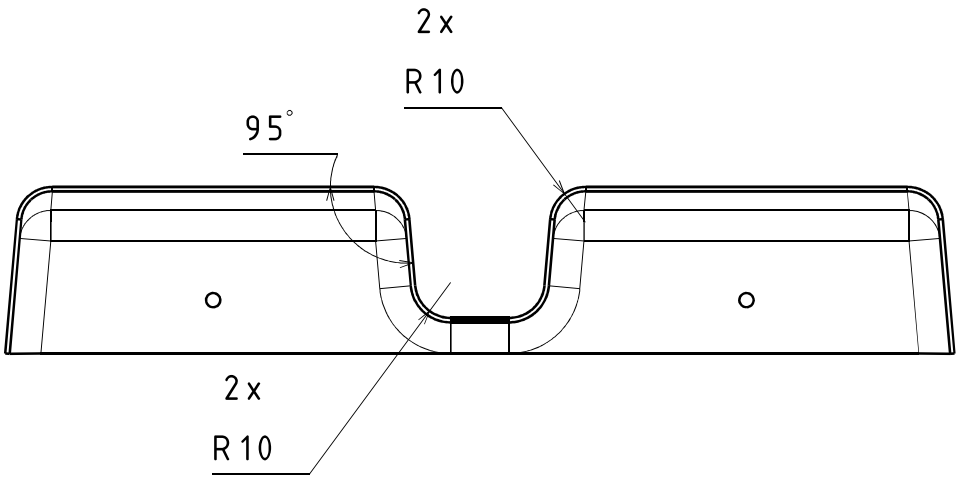

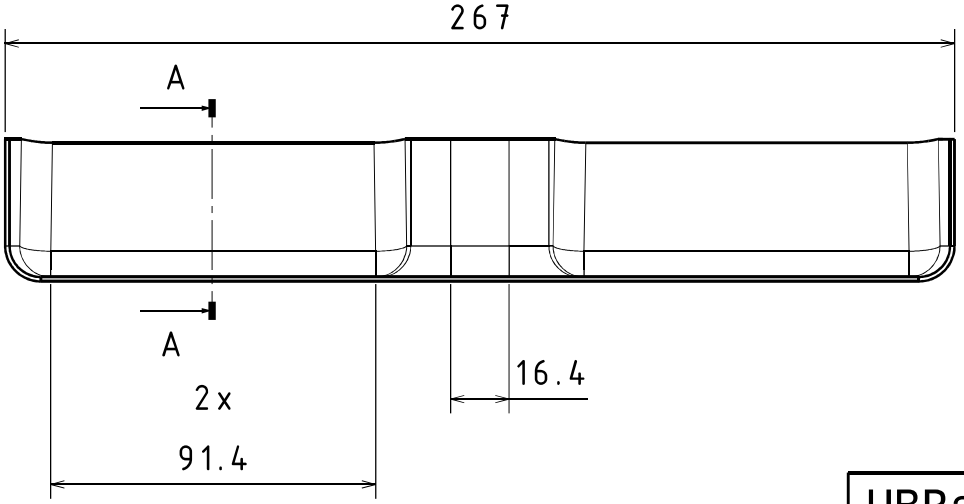

LAMINATE TABLE			
OP NO.	MATERIAL SPECIFICATION	ORIENTATION	POSITION
CHECK ALL TOOLING IS CORRECT AND RELEASED			
10	EPC300-C280T-HS-3K-42-1250	0/90	1 PLY ALL OVER
20	EPC300-C280T-HS-3K-42-1250	45	1 PLY ALL OVER
30	EPC300-C280T-HS-3K-42-1250	0/90	1 PLY ALL OVER
40	EPC300-C280T-HS-3K-42-1250	0/90	1 PLY ALL OVER
50	EPC300-C280T-HS-3K-42-1250	45	1 PLY ALL OVER
60	EPC300-C280T-HS-3K-42-1250	0/90	1 PLY ALL OVER
70	PEEL PLY	-	-
VACUUM BAG AND CURE; RAMP UP TO 80C, HOLD FOR 30 MINS, RAMP UP TP 120C HOLD FOR 120 MINS, RAMP DOWN			

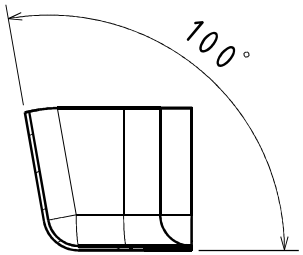

SECTION A-A

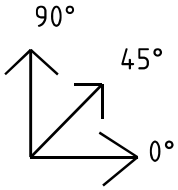

UBRacing

A4

IF IN DOUBT - ASK

DO NOT SCALE

TEL. +44 (0)121 414 4218

E-MAIL. ubracing@gmail.com

MATERIAL CERTIFICATE REQUIRED

DIMENSIONS IN MILIMETRES U.O.S

0 DECIMAL PLACES	±0.50
1 DECIMAL PLACE	±0.25
2 DECIMAL PLACES	±0.10
3 DECIMAL PLACES	±0.02
GENERAL CONCENTRICITY	0.1 TIR
ANGULAR TOLERANCE	±0.25

REMOVE BURRS AND SHARP EDGES

COMPONENT MASS (kg): N/A

DRAWN BY: LPT

MATERIAL SPEC: SEE LAMINATE TABLE

HEAT TREATMENT: N/A

SURFACE TREATMENT: N/A

DESCRIPTION: HEEL REST

SCALE: 1:2

SHEET: 1/1

PART NUMBER: UBR28_PB_N_002_01A

This drawing and the copyright herein are the property of UBRacing. It is private & confidential and is issued on the express condition that it is not modified, copied or communicated to any other party without the written consent of UBRacing.

REV	DESCRIPTION	INIT	DATE
01A	INITIAL RELEASE	LPT	26/03/2025

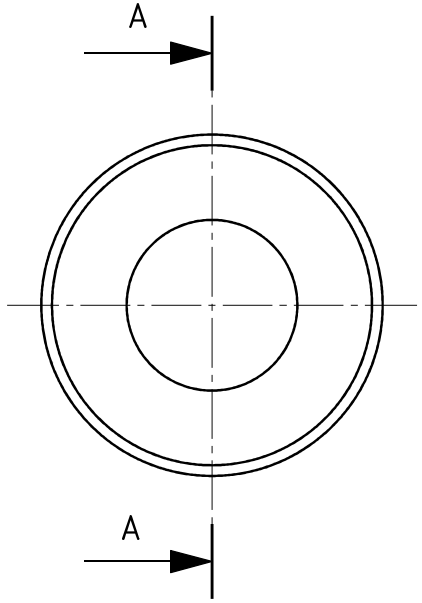

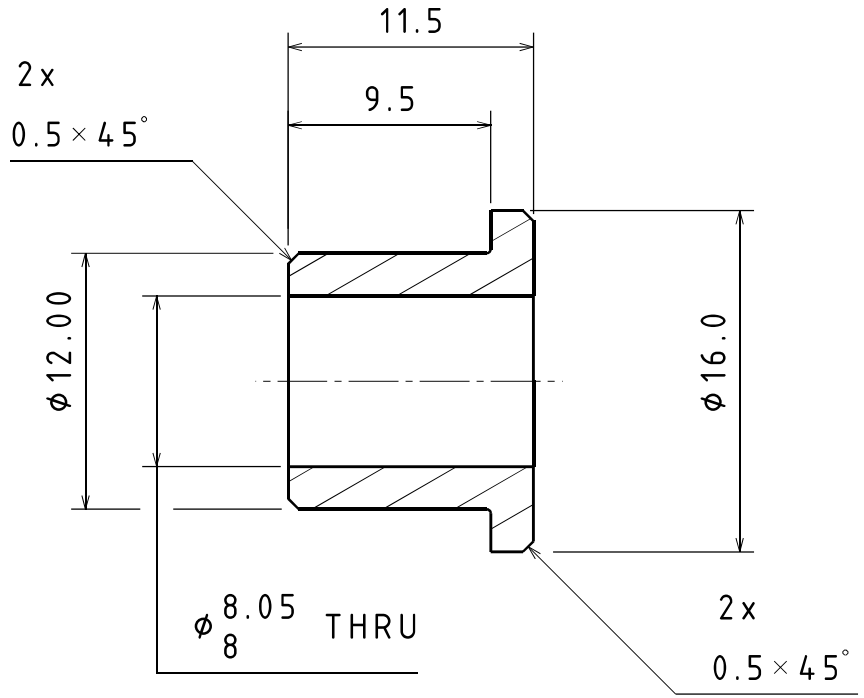

SECTION A-A

UBRacing	MATERIAL CERTIFICATE REQUIRED DIMENSIONS IN MILIMETRES U.O.S 0 DECIMAL PLACES ±0.50 1 DECIMAL PLACE ±0.25 2 DECIMAL PLACES ±0.10 3 DECIMAL PLACES ±0.02 GENERAL CONCENTRICITY 0.1 TIR ANGULAR TOLERANCE ±0.25 REMOVE BURRS AND SHARP EDGES	COMPONENT MASS (kg)	MATERIAL SPEC: IGLIDER HEAT TREATMENT: N/A SURFACE TREATMENT: N/A
A4 IF IN DOUBT - ASK DO NOT SCALE		DRAWN BY: LPT	DESCRIPTION: IGUS PEDAL BUSHING
TEL. +44 (0)121 414 4218 E-MAIL. ubracing@gmail.com			
This drawing and the copyright herein are the property of UBRacing. It is private & confidential and is issued on the express condition that it is not modified, copied or communicated to any other party without the written consent of UBRacing.		SCALE 3:1	SHEET 1/1 · PART NUMBER UBR28_PB_N_003_02A

REV	DESCRIPTION	INIT	DATE
01A	INITIAL RELEASE	LPT	18/02/2025
01B	POCKET IN DETAIL VIEW C CHANGE IN DEPTH	LPT	08/04/2025

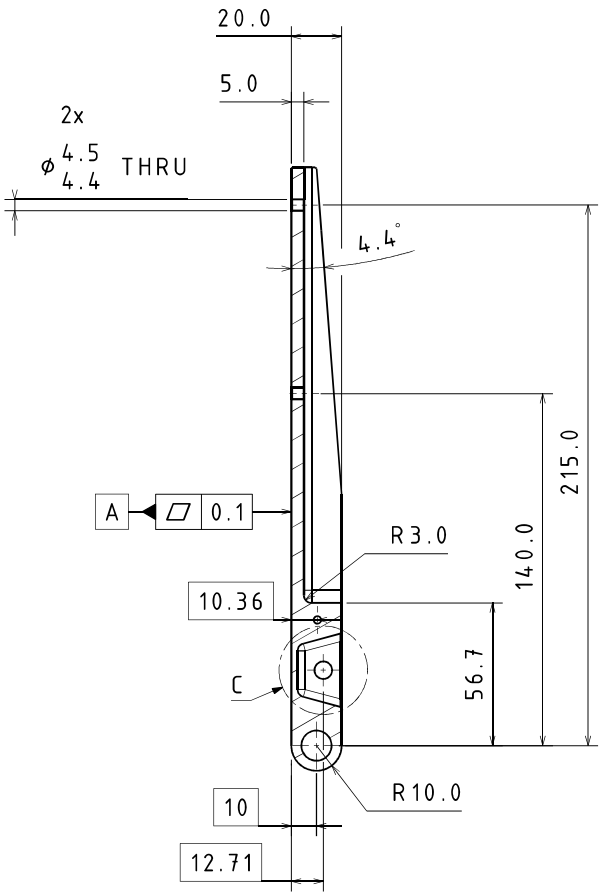

SECTION A-A

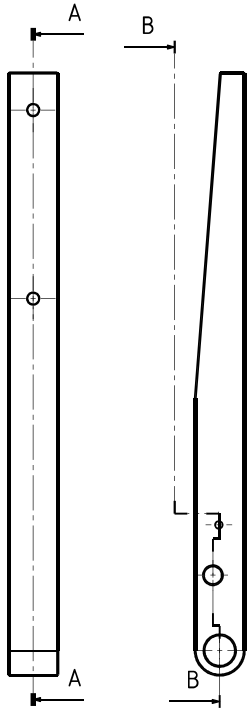

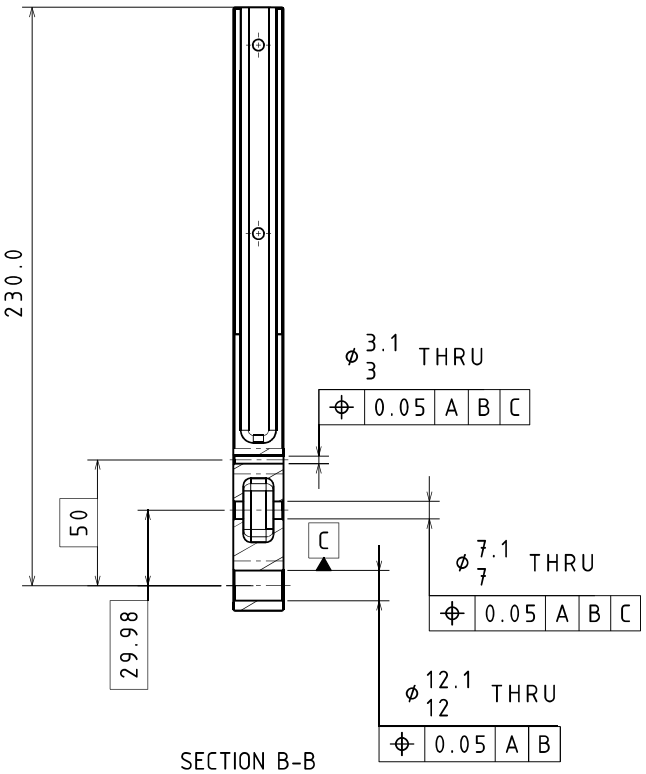

SECTION B-B

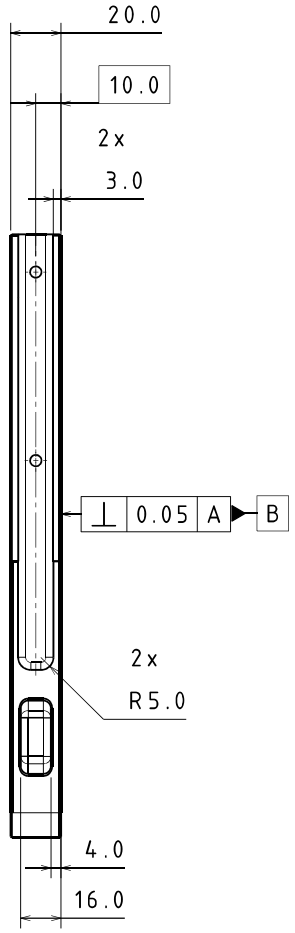

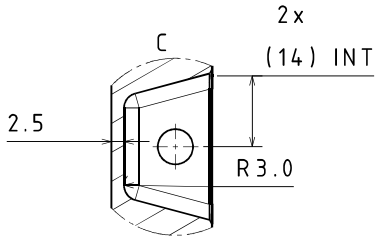

NOTES:
1) MACHINE UNDIMENSIONED FEATURES TO CAD DATA 0.2
2) REMOVE BURRS AND SHARP EDGES

UBRacing	MATERIAL CERTIFICATE REQUIRED DIMENSIONS IN MILIMETRES U.O.S 0 DECIMAL PLACES ±0.50 1 DECIMAL PLACE ±0.25 2 DECIMAL PLACES ±0.10 3 DECIMAL PLACES ±0.02 GENERAL CONCENTRICITY 0.1 TIR ANGULAR TOLERANCE ±0.25° REMOVE BURRS AND SHARP EDGES	COMPONENT MASS (kg) 0.136	MATERIAL SPEC: ALUMINIUM 7075 HEAT TREATMENT: N/A SURFACE TREATMENT: N/A
A3 IF IN DOUBT - ASK DO NOT SCALE		DRAWN BY LPT	DESCRIPTION: ACCELERATOR PEDAL ARM
TEL. +44 (0)121 414 4218 E-MAIL. ubracing@gmail.com		SCALE 1:2	SHEET 1/1 · PART NUMBER UBR28_PB_101_02B

This drawing and the copyright herein are the property of UBRacing. It is private & confidential and is issued on the express condition that it is not modified,copied or communicated to any other party without the written consent of UBRacing.

REV	DESCRIPTION	INIT	DATE
01A	INITIAL RELEASE	LPT	12/02/2025
01B	DRAWING REVISIONS	LPT	14/02/2025

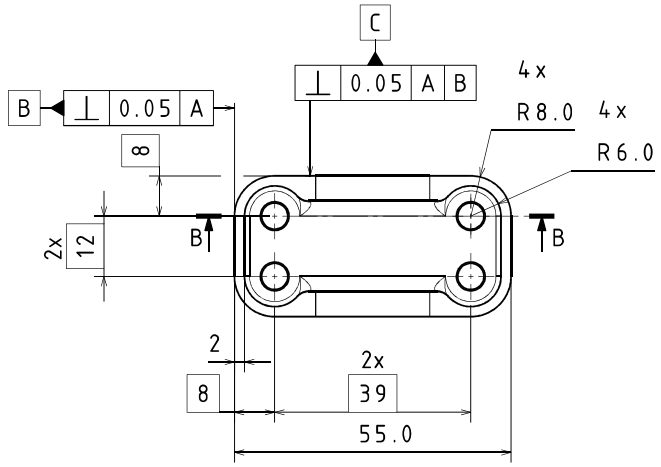

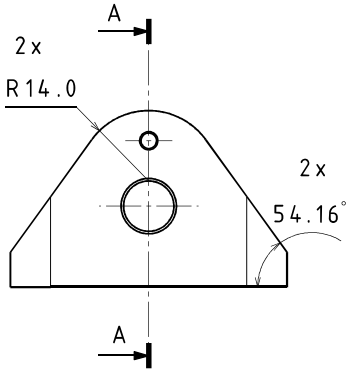

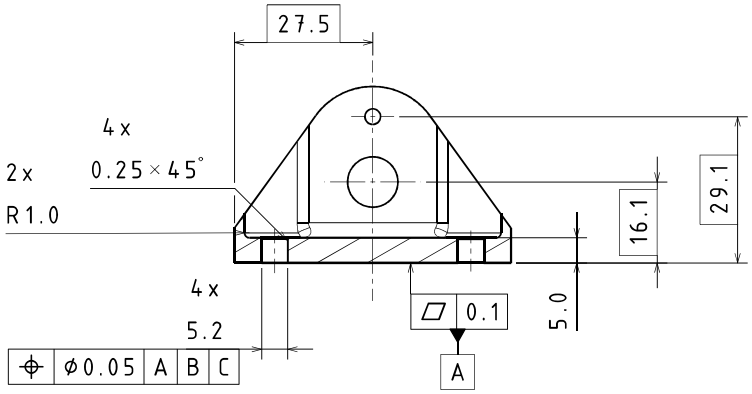

SECTION B-B

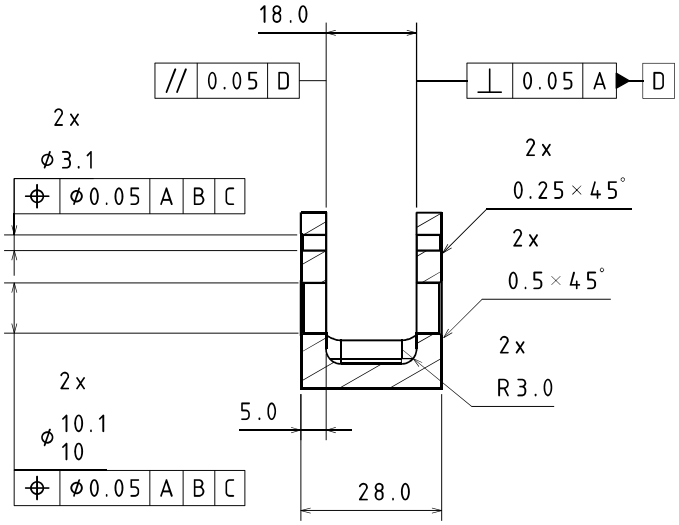

SECTION A-A

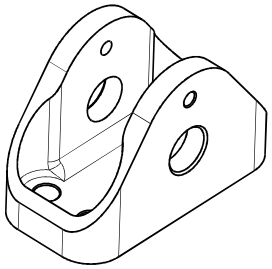

ISOMETRIC VIEW

NOTES
1) BREAK ALL SHARP EDGES
2) REFER TO CAD DATA FOR ANY UNDIMENSIONED FEATURES

UBRacing	MATERIAL CERTIFICATE REQUIRED DIMENSIONS IN MILIMETRES U.O.S	COMPONENT MASS (kg)	0.044	MATERIAL SPEC	ALUMINIUM 7075
				HEAT TREATMENT	N/A
A3	IF IN DOUBT - ASK DO NOT SCALE	DRAWN BY	LPT	SURFACE TREATMENT	N/A
				DESCRIPTION	ACCELERATOR PEDAL ASSY FRONT CLEVIS
TEL.	+44 (0)121 414 4218				
E-MAIL.	ubracing@gmail.com				
	0 DECIMAL PLACES ±0.50 1 DECIMAL PLACE ±0.25 2 DECIMAL PLACES ±0.10 3 DECIMAL PLACES ±0.02 GENERAL CONCENTRICITY 0.1 TIR ANGULAR TOLERANCE ±0.25° REMOVE BURRS AND SHARP EDGES				
		SCALE	1:1	SHEET 1/1	PART NUMBER UBR28_PB_N_102_01A

This drawing and the copyright herein are the property of UBRacing. It is private & confidential and is issued on the express condition that it is not modified,copied or communicated to any other party without the written consent of UBRacing.

REV	DESCRIPTION	INIT	DATE
01A	INITIAL RELEASE	LPT	06/02/2025
01B	DRAWING CHANGES	LPT	07/02/2025

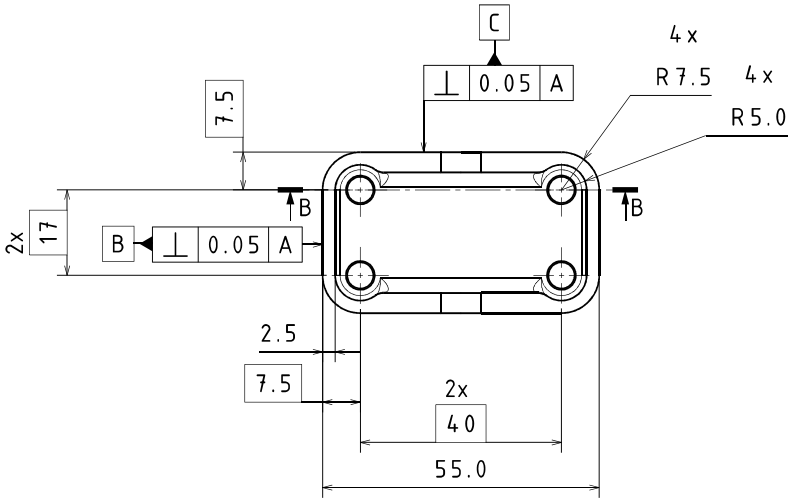

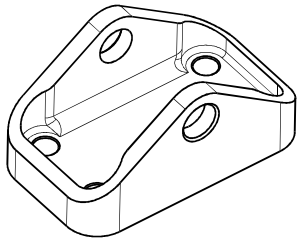

ISOMETRIC VIEW

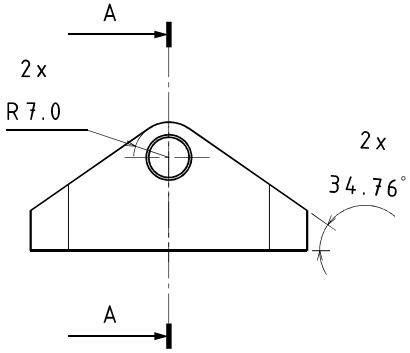

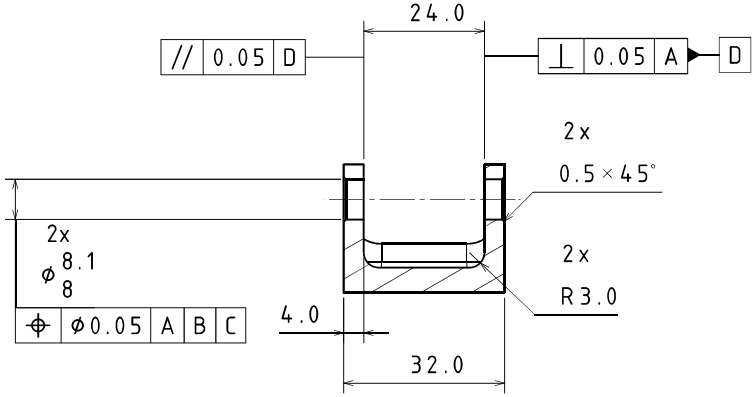

SECTION A-A

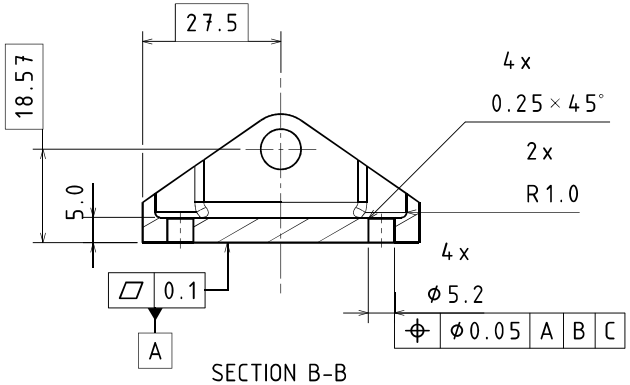

SECTION B-B

NOTES
1) BREAK ALL SHARP EDGES
2) REFER TO CAD DATA FOR ANY UNDIMENSIONED FEATURES

UBRacing	MATERIAL CERTIFICATE REQUIRED DIMENSIONS IN MILIMETRES U.O.S	COMPONENT MASS (kg)	0.038	MATERIAL SPEC	Aluminium 7075
				HEAT TREATMENT	N/A
A3	IF IN DOUBT - ASK DO NOT SCALE 0 DECIMAL PLACES ±0.50 1 DECIMAL PLACE ±0.25 2 DECIMAL PLACES ±0.10 3 DECIMAL PLACES ±0.02 GENERAL CONCENTRICITY 0.1 TIR ANGULAR TOLERANCE ±0.25° REMOVE BURRS AND SHARP EDGES	DRAWN BY	LPT	SURFACE TREATMENT	N/A
				DESCRIPTION	ACCELERATOR PEDAL ASSY REAR CLEVIS
TEL.	+44 (0)121 414 4218				
E-MAIL.	ubracing@gmail.com				
This drawing and the copyright herein are the property of UBRacing. It is private & confidential and is issued on the express condition that it is not modified,copied or communicated to any other party without the written consent of UBRacing.		SCALE	1:1	SHEET 1/1	PART NUMBER UBR28_PB_103_02A

REV	DESCRIPTION	INIT	DATE
01A	INITIAL RELEASE	LPT	19/02/2025
01B	DRAWING CHANGES	LPT	05/03/2025

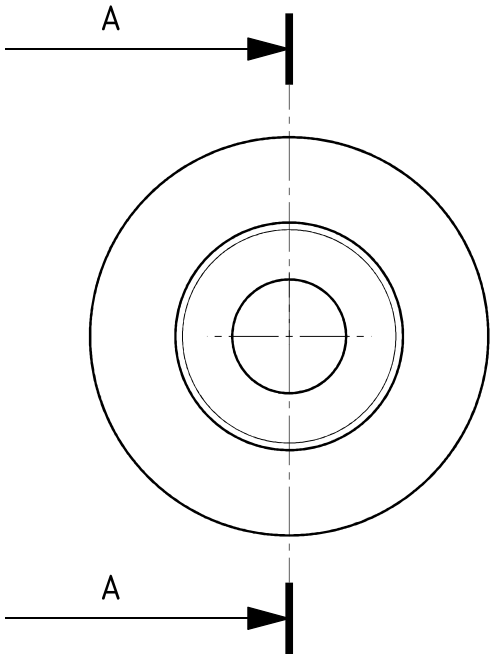

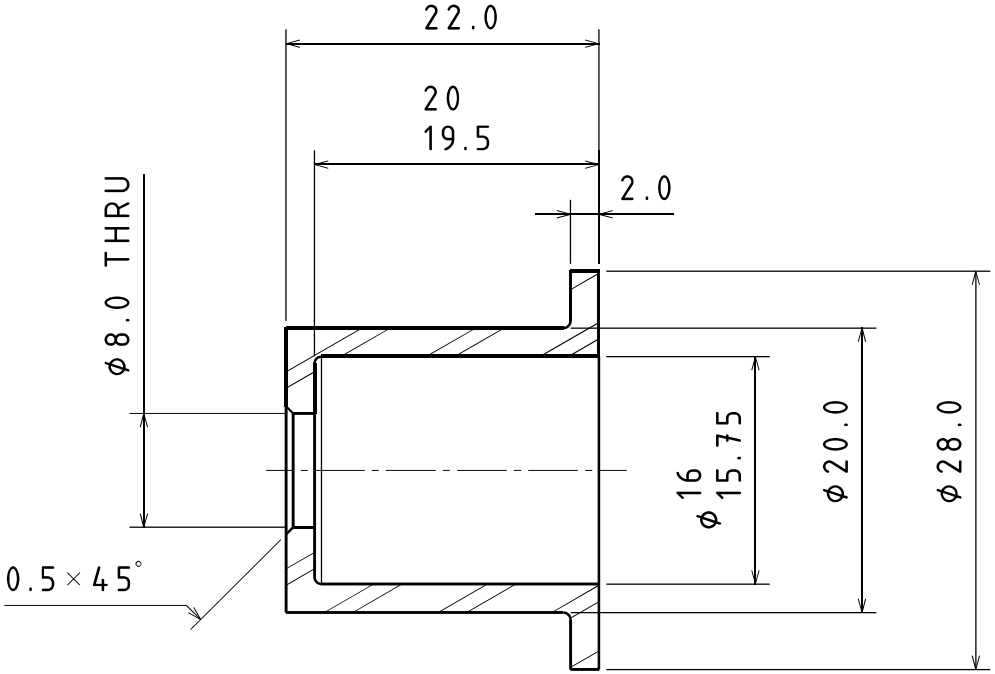

SECTION A-A

UBRacing	MATERIAL CERTIFICATE REQUIRED DIMENSIONS IN MILIMETRES U.O.S	COMPONENT MASS (kg)	N/A	MATERIAL SPEC	ALUMINIUM
				HEAT TREATMENT	N/A
A4	IF IN DOUBT - ASK DO NOT SCALE	DRAWN BY	LPT	SURFACE TREATMENT	N/A
	0 DECIMAL PLACES ±0.50 1 DECIMAL PLACE ±0.25 2 DECIMAL PLACES ±0.10 3 DECIMAL PLACES ±0.02 GENERAL CONCENTRICITY 0.1 TIR ANGULAR TOLERANCE ±0.25° REMOVE BURRS AND SHARP EDGES			DESCRIPTION	TOR SPRING END CAP
TEL.	+44 (0)121 414 4218				
E-MAIL.	ubracing@gmail.com				
This drawing and the copyright herein are the property of UBRacing. It is private & confidential and is issued on the express condition that it is not modified, copied or communicated to any other party without the written consent of UBRacing.		SCALE	2:1	SHEET 1/1	PART NUMBER UBR28_PB_N_104_01A

REV	DESCRIPTION	INIT	DATE
01A	INITIAL RELEASE	LPT	19/02/2025
01B	SECOND RELEASE (TOLERANCING UPDATES)	LPT	21/02/2025

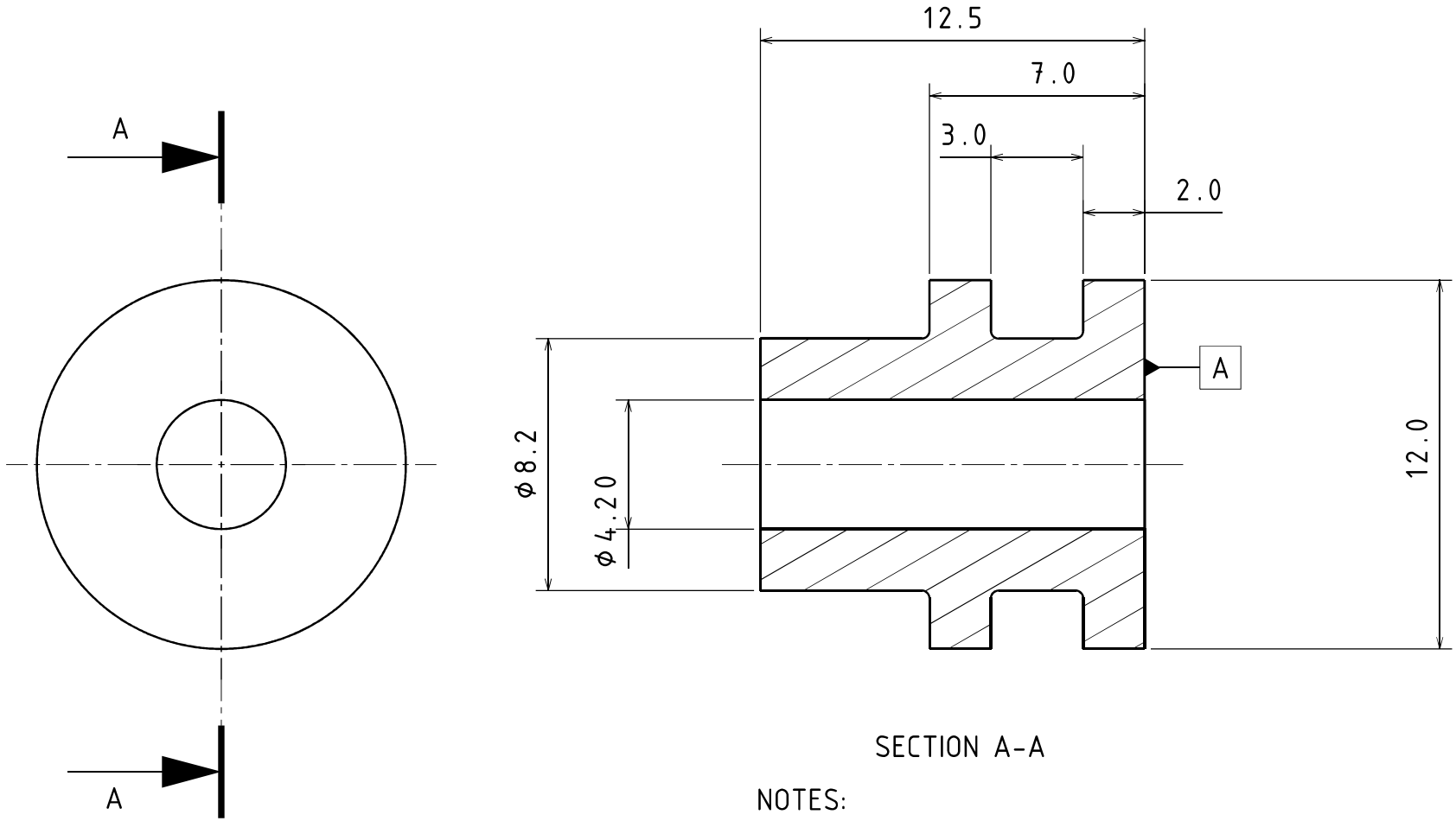

SECTION A-A

NOTES:

1) USE PARTING TOOL FOR 3 mm GAP

UBRacing	MATERIAL CERTIFICATE REQUIRED DIMENSIONS IN MILIMETRES U.O.S	COMPONENT MASS (kg)	N/A	MATERIAL SPEC	ALUMINIUM
				HEAT TREATMENT	N/A
A4	IF IN DOUBT - ASK DO NOT SCALE	DRAWN BY	LPT	SURFACE TREATMENT	N/A
	0 DECIMAL PLACES ±0.50 1 DECIMAL PLACE ±0.25 2 DECIMAL PLACES ±0.10 3 DECIMAL PLACES ±0.02 GENERAL CONCENTRICITY 0.1 TIR ANGULAR TOLERANCE ±0.25° REMOVE BURRS AND SHARP EDGES			DESCRIPTION	TOR SPRING TOP HAT
TEL.	+44 (0)121 414 4218				
E-MAIL.	ubracing@gmail.com				
This drawing and the copyright herein are the property of UBRacing. It is private & confidential and is issued on the express condition that it is not modified, copied or communicated to any other party without the written consent of UBRacing.		SCALE	5:1	SHEET 1/1	PART NUMBER UBR28_PB_N_105_01A

REV	DESCRIPTION	INIT	DATE
01A	INITIAL RELEASE	LPT	05/04/2025

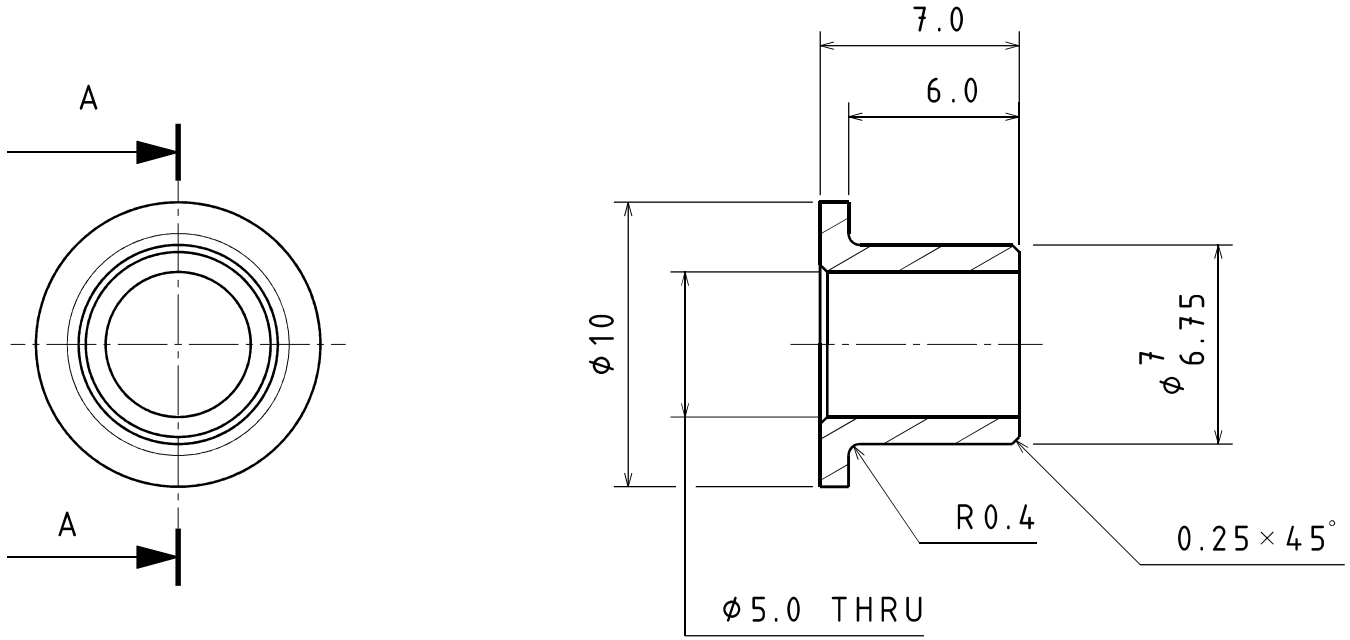

SECTION A-A

UBRacing	MATERIAL CERTIFICATE REQUIRED DIMENSIONS IN MILIMETRES U.O.S 0 DECIMAL PLACES ±0.50 1 DECIMAL PLACE ±0.25 2 DECIMAL PLACES ±0.10 3 DECIMAL PLACES ±0.02 GENERAL CONCENTRICITY 0.1 TIR ANGULAR TOLERANCE ±0.25 REMOVE BURRS AND SHARP EDGES	COMPONENT MASS (kg)	N/A	MATERIAL SPEC	ALUMINIUM
A4 IF IN DOUBT - ASK DO NOT SCALE		DRAWN BY LPT		HEAT TREATMENT	N/A
TEL. +44 (0)121 414 4218				SURFACE TREATMENT	N/A
E-MAIL. ubracing@gmail.com				DESCRIPTION	TOP HAT PSRD ACCELERATOR PEDAL
		SCALE	4:1	SHEET 1/1	PART NUMBER UBR28_PB_N_106_01A

This drawing and the copyright herein are the property of UBRacing. It is private & confidential and is issued on the express condition that it is not modified, copied or communicated to any other party without the written consent of UBRacing.

REV	DESCRIPTION	INIT	DATE
01A	INITIAL RELEASE	LPT	05/04/2025

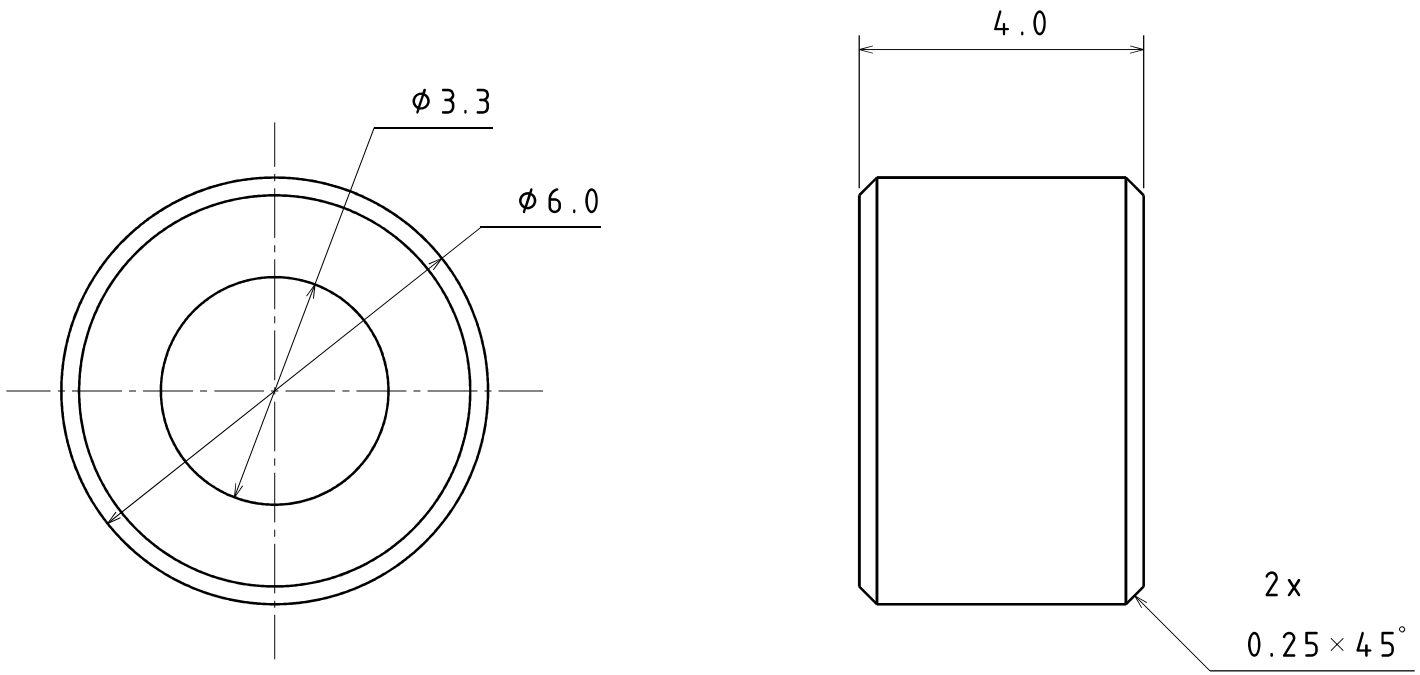

UBRacing

A4

IF IN DOUBT - ASK

DO NOT SCALE

TEL. +44 (0)121 414 4218

E-MAIL. ubracing@gmail.com

MATERIAL CERTIFICATE REQUIRED

DIMENSIONS IN MILIMETRES U.O.S

0 DECIMAL PLACES	±0.50
1 DECIMAL PLACE	±0.25
2 DECIMAL PLACES	±0.10
3 DECIMAL PLACES	±0.02
GENERAL CONCENTRICITY	0.1 TIR
ANGULAR TOLERANCE	±0.25°

REMOVE BURRS AND SHARP EDGES

This drawing and the copyright herein are the property of UBRacing. It is private & confidential and is issued on the express condition that it is not modified, copied or communicated to any other party without the written consent of UBRacing.

COMPONENT MASS (kg)	N/A
DRAWN BY	LPT
SCALE	10:1
MATERIAL SPEC	ALUMINIUM
HEAT TREATMENT	N/A
SURFACE TREATMENT	N/A
DESCRIPTION	SPACER POT ACCELERATOR PEDAL
SHEET	1/1
PART NUMBER	UBR28_PB_N_107_01A

REV	DESCRIPTION	INIT	DATE
01A	INITIAL RELEASE	LPT	19/05/2025

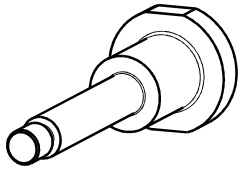

ISOMETRIC VIEW (1:1)

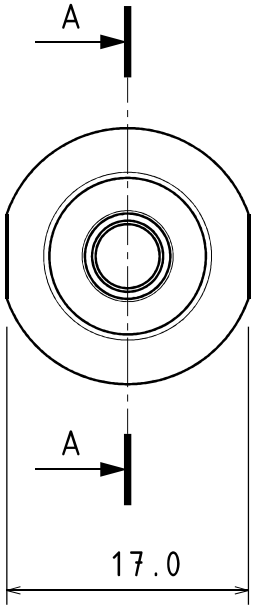

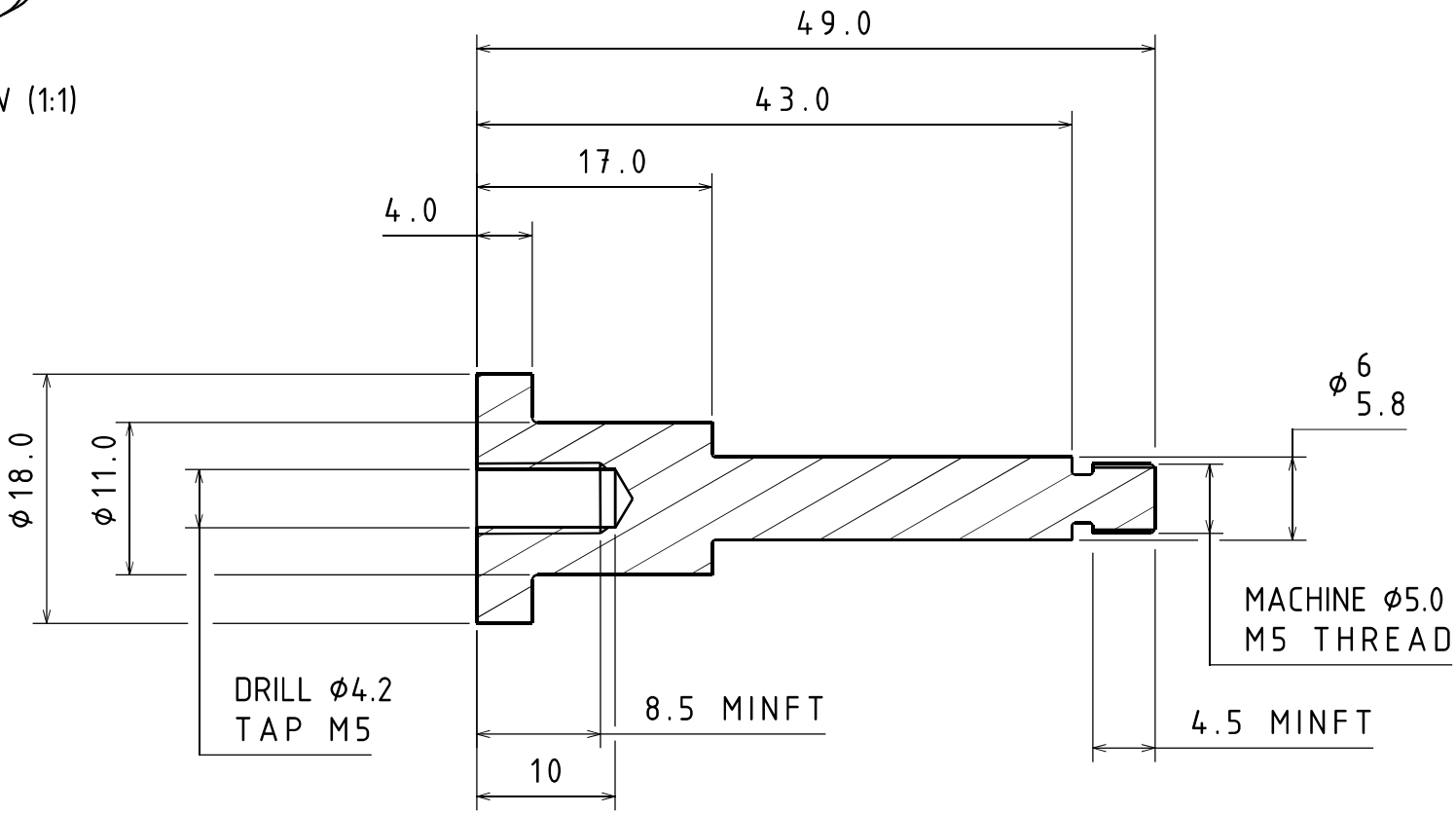

SECTION A-A

NOTES:

1) MAKE FLAT EDGES WITH FILE

UBRacing	MATERIAL CERTIFICATE REQUIRED DIMENSIONS IN MILIMETRES U.O.S	COMPONENT MASS (kg)	0.0079	MATERIAL SPEC	ALUMINIUM
				HEAT TREATMENT	N/A
A4	IF IN DOUBT - ASK DO NOT SCALE	DRAWN BY	LPT	SURFACE TREATMENT	N/A
	0 DECIMAL PLACES ±0.50 1 DECIMAL PLACE ±0.25 2 DECIMAL PLACES ±0.10 3 DECIMAL PLACES ±0.02 GENERAL CONCENTRICITY 0.1 TIR ANGULAR TOLERANCE ±0.25°			DESCRIPTION	SPRING CAP UPR ACCELERATOR PEDAL
TEL.	+44 (0)121 414 4218				
E-MAIL.	ubracing@gmail.com				
	REMOVE BURRS AND SHARP EDGES				
	This drawing and the copyright herein are the property of UBRacing. It is private & confidential and is issued on the express condition that it is not modified, copied or communicated to any other party without the written consent of UBRacing.	SCALE	2:1	SHEET 1/1	PART NUMBER UBR28_PB_N_108_01A

REV	DESCRIPTION	INIT	DATE
01A	INITIAL RELEASE	LPT	18/05/2025

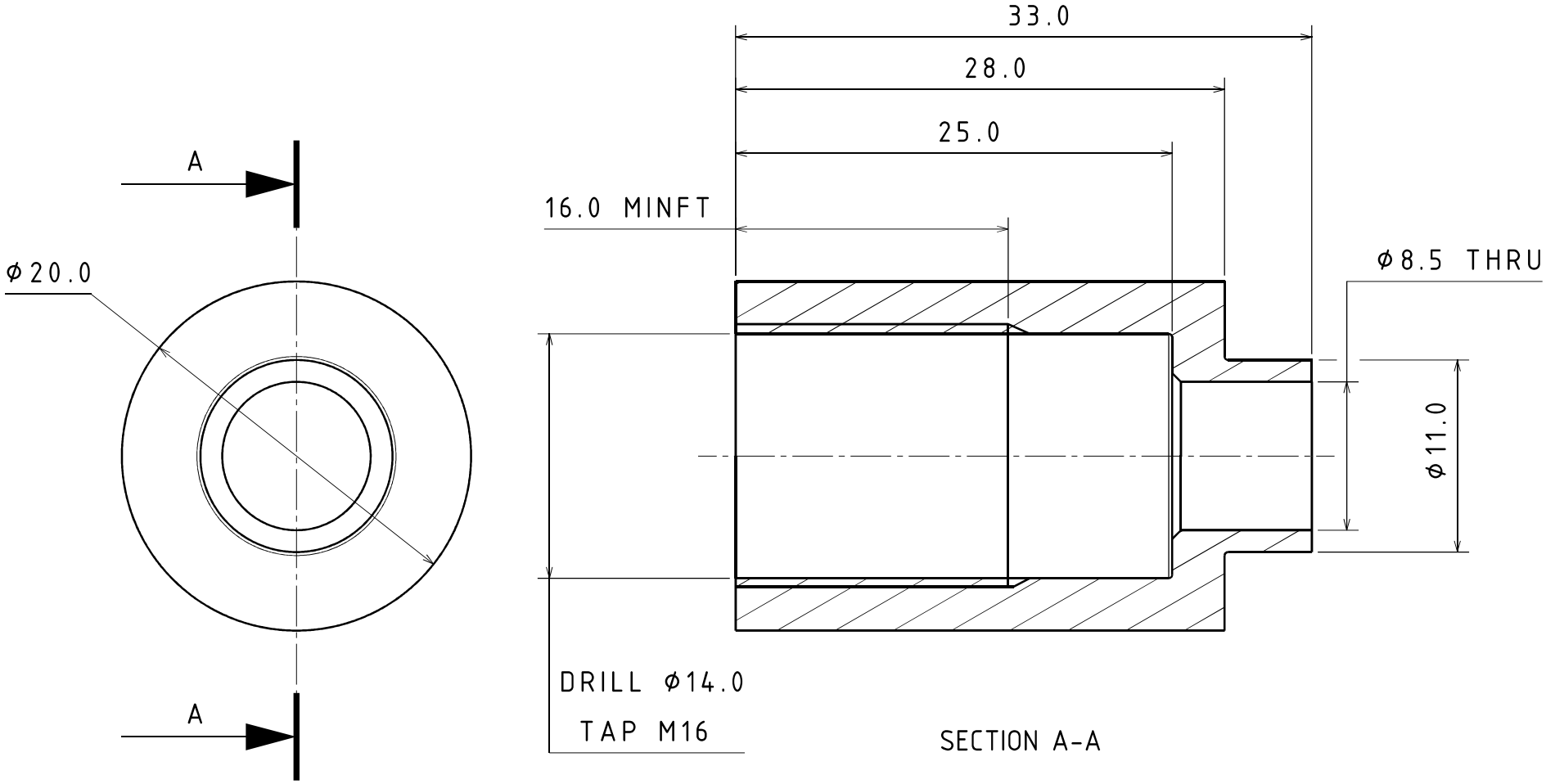

NOTES:

1) ADD CHAMFER ON INTERNAL HOLE WITH DEBURRING TOOL

UBRacing	MATERIAL CERTIFICATE REQUIRED DIMENSIONS IN MILIMETRES U.O.S	COMPONENT MASS (kg)	0.013	MATERIAL SPEC	ALUMINIUM
				HEAT TREATMENT	N/A
A4	IF IN DOUBT - ASK DO NOT SCALE	DRAWN BY	LPT	SURFACE TREATMENT	N/A
	0 DECIMAL PLACES ±0.50 1 DECIMAL PLACE ±0.25 2 DECIMAL PLACES ±0.10 3 DECIMAL PLACES ±0.02 GENERAL CONCENTRICITY 0.1 TIR ANGULAR TOLERANCE ±0.25			DESCRIPTION	SPRING CAP LWR ACCELERATOR PEDAL
TEL.	+44 (0)121 414 4218				
E-MAIL.	ubracing@gmail.com				
	REMOVE BURRS AND SHARP EDGES				
		SCALE	3:1	SHEET 1/1	PART NUMBER UBR28_PB_N_109_02A

This drawing and the copyright herein are the property of UBRacing. It is private & confidential and is issued on the express condition that it is not modified, copied or communicated to any other party without the written consent of UBRacing.

REV	DESCRIPTION	INIT	DATE
01A	INITIAL RELEASE	LPT	18/05/2025

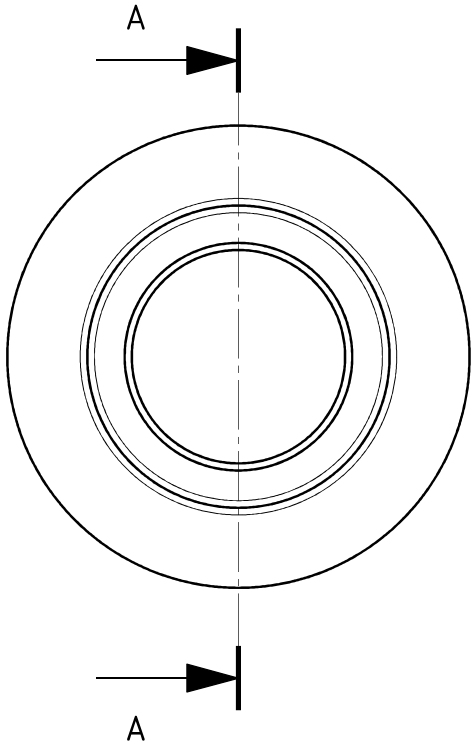

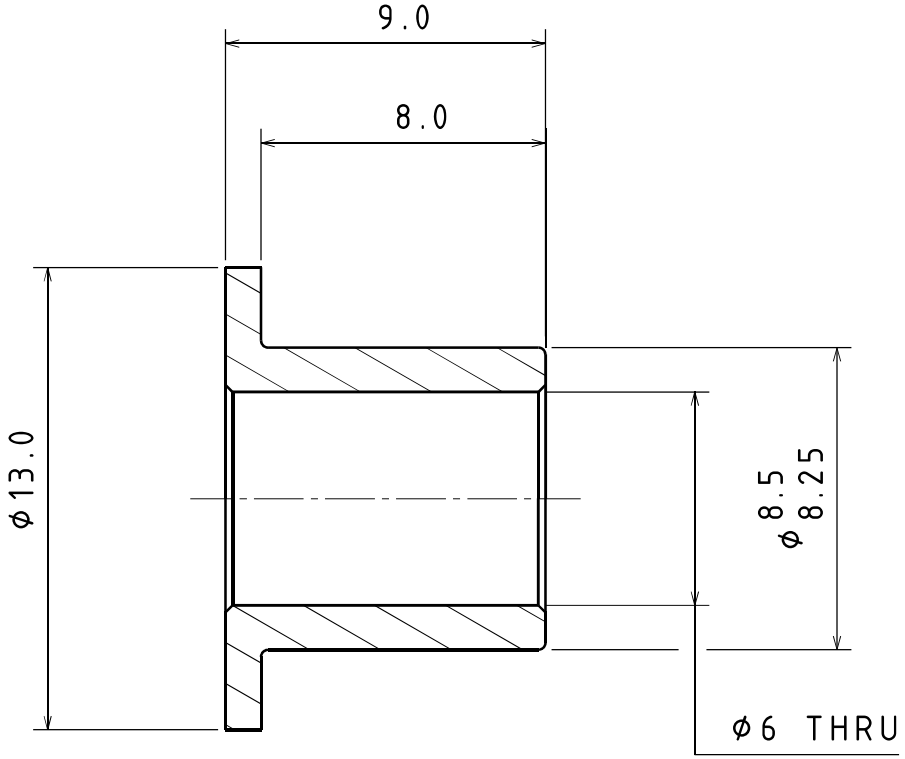

SECTION A-A

UBRacing	MATERIAL CERTIFICATE REQUIRED DIMENSIONS IN MILIMETRES U.O.S	COMPONENT MASS (kg)	N/A	MATERIAL SPEC	IGLIDUR
				HEAT TREATMENT	N/A
A4	IF IN DOUBT - ASK DO NOT SCALE	DRAWN BY	LPT	SURFACE TREATMENT	N/A
	0 DECIMAL PLACES ±0.50 1 DECIMAL PLACE ±0.25 2 DECIMAL PLACES ±0.10 3 DECIMAL PLACES ±0.02 GENERAL CONCENTRICITY 0.1 TIR ANGULAR TOLERANCE ±0.25°			DESCRIPTION	INSERT SPRING CAP ACCELERATOR PEDAL
TEL.	+44 (0)121 414 4218				
E-MAIL.	ubracing@gmail.com				
	REMOVE BURRS AND SHARP EDGES				
		SCALE	5:1	SHEET 1/1	PART NUMBER UBR28_PB_N_110_02A

This drawing and the copyright herein are the property of UBRacing. It is private & confidential and is issued on the express condition that it is not modified, copied or communicated to any other party without the written consent of UBRacing.

REV	DESCRIPTION	INIT	DATE
01A	INITIAL RELEASE	LPT	18/05/2025

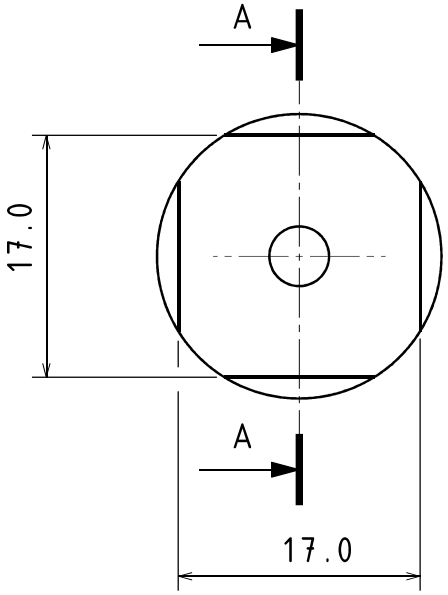

SECTION A-A

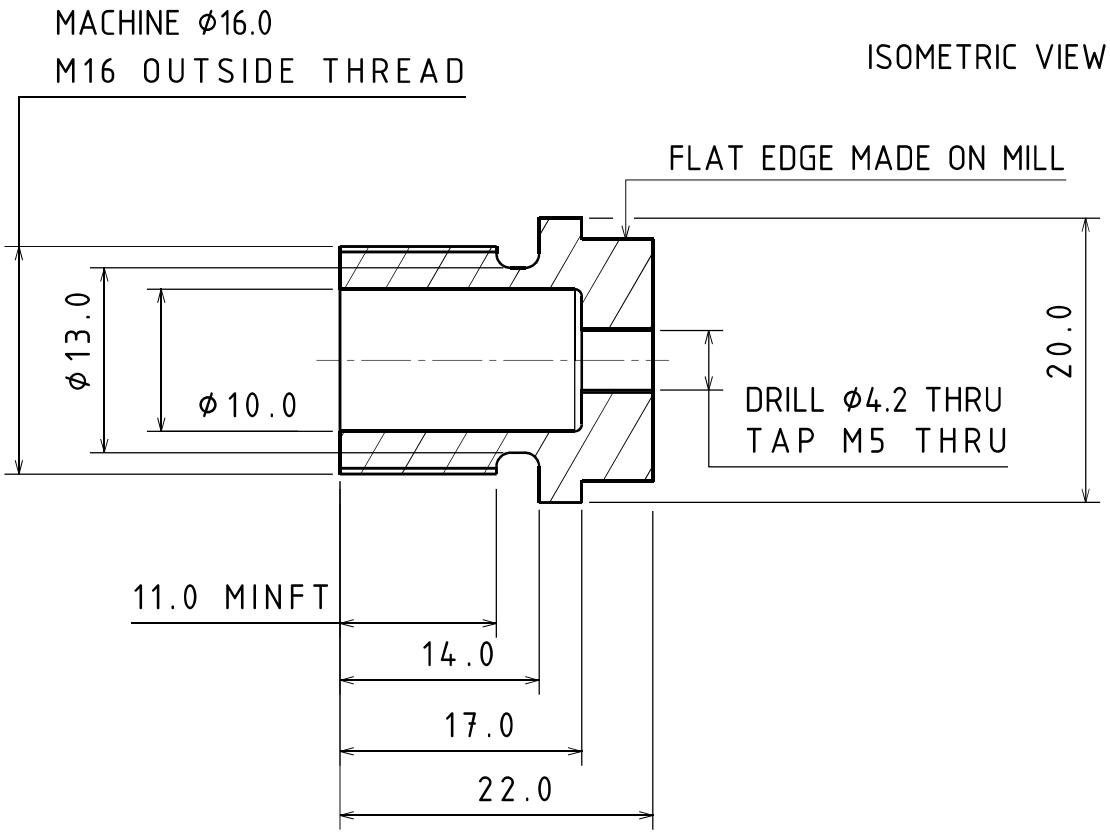

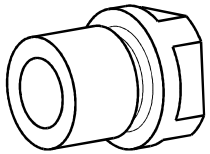

ISOMETRIC VIEW (1:1)

NOTES:

1) MAKE SQUARE EDGES WITH FILE
2) MAKE 3 mm GAP WITH PARTING TOOL

UBRacing	MATERIAL CERTIFICATE REQUIRED DIMENSIONS IN MILIMETRES U.O.S	COMPONENT MASS (kg)	0.0095	MATERIAL SPEC	ALUMINIUM
A4	IF IN DOUBT - ASK DO NOT SCALE	0 DECIMAL PLACES ±0.50 1 DECIMAL PLACE ±0.25 2 DECIMAL PLACES ±0.10 3 DECIMAL PLACES ±0.02	DRAWN BY LPT	HEAT TREATMENT	N/A
				SURFACE TREATMENT	N/A
TEL.	+44 (0)121 414 4218	GENERAL CONCENTRICITY 0.1 TIR ANGULAR TOLERANCE ±0.25°		DESCRIPTION	SPRING CAP ROD END
E-MAIL.	ubracing@gmail.com	REMOVE BURRS AND SHARP EDGES			
			SCALE 5:1	SHEET 1/1	PART NUMBER UBR28_PB_N_111_01A

This drawing and the copyright herein are the property of UBRacing. It is private & confidential and is issued on the express condition that it is not modified, copied or communicated to any other party without the written consent of UBRacing.

REV	DESCRIPTION	INIT	DATE
01A	INITIAL RELEASE	LPT	05/04/2025

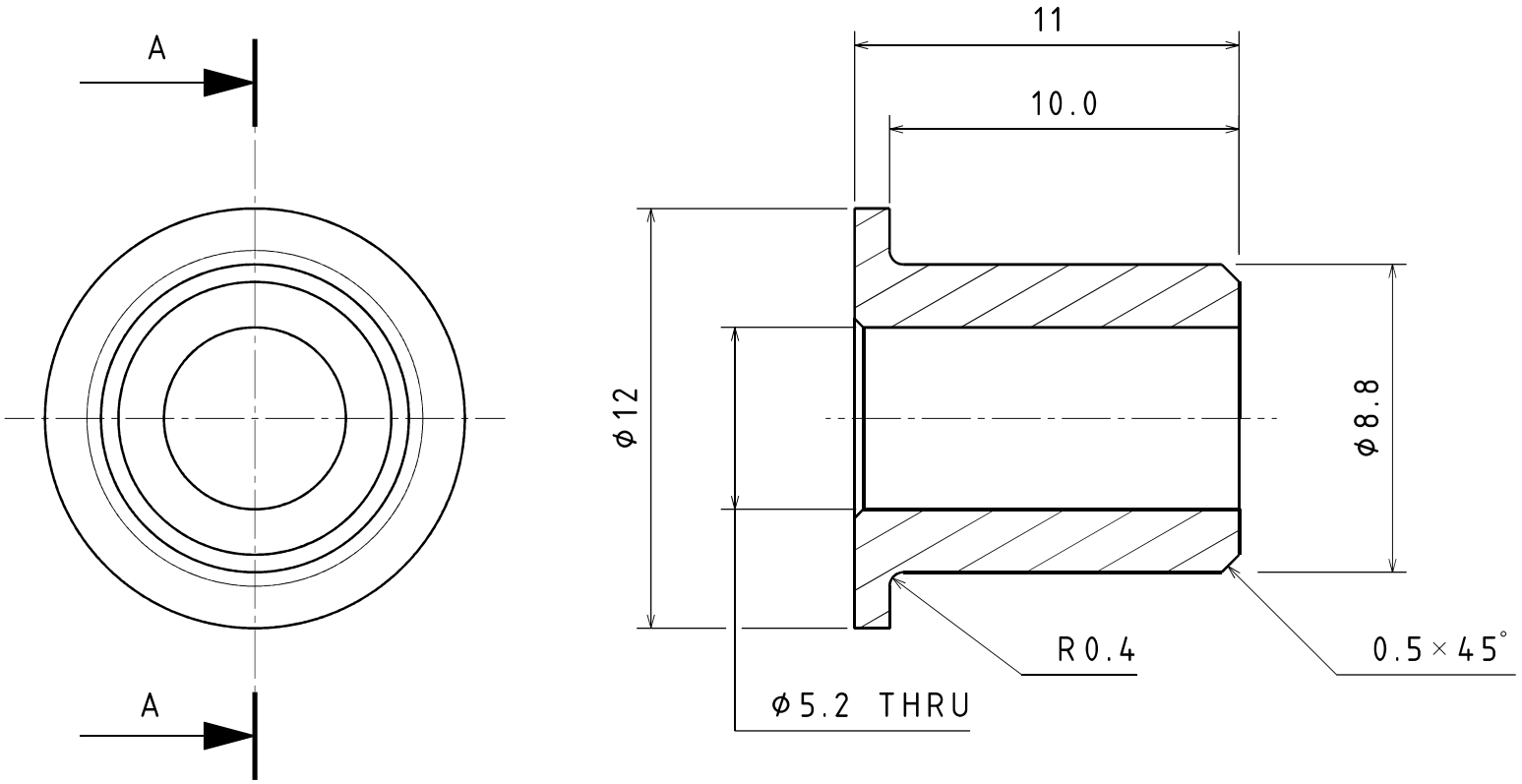

SECTION A-A

NOTES:

1) MAKE HOLE CHAMFER WITH DEBURRING TOOL

UBRacing	MATERIAL CERTIFICATE REQUIRED DIMENSIONS IN MILIMETRES U.O.S	COMPONENT MASS (kg)	N/A	MATERIAL SPEC	ALUMINIUM
				HEAT TREATMENT	N/A
A4	IF IN DOUBT - ASK DO NOT SCALE	DRAWN BY	LPT	SURFACE TREATMENT	N/A
TEL.	+44 (0)121 414 4218			DESCRIPTION	TOP HAT CLEVIS ACCELERATOR PEDAL
E-MAIL.	ubracing@gmail.com				
	REMOVE BURRS AND SHARP EDGES	SCALE	5:1	SHEET 1/1	PART NUMBER UBR28_PB_N_112_01A

0 DECIMAL PLACES	±0.50
1 DECIMAL PLACE	±0.25
2 DECIMAL PLACES	±0.10
3 DECIMAL PLACES	±0.02
GENERAL CONCENTRICITY	0.1 TIR
ANGULAR TOLERANCE	±0.25°

This drawing and the copyright herein are the property of UBRacing. It is private & confidential and is issued on the express condition that it is not modified, copied or communicated to any other party without the written consent of UBRacing.

REV	DESCRIPTION	INIT	DATE
01A	INITIAL RELEASE	HCF	14/03/2024

ITEM	PART NO.	DESCRIPTION	QTY	BOND PREP	ADHESIVE
1	UBR28_CH_N_915	IMPACT ATTENUATOR BLOCK	4	SEE NOTES	PERMABOND ET5429
2	UBR28_CH_N_916	IMPACT ATTENUATOR BONDING SURFACE	3	SEE NOTES	PERMABOND ET5429
3	UBR28_CH_N_920	ANTI-INTRUSION PLATE	1	SEE NOTES	PERMABOND ET5429

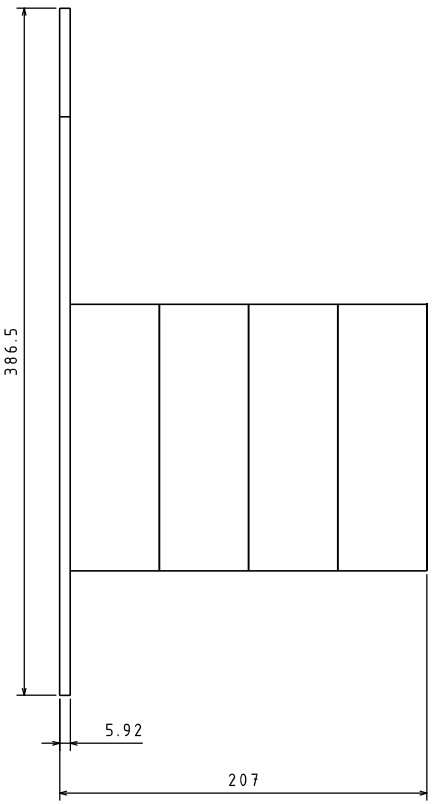

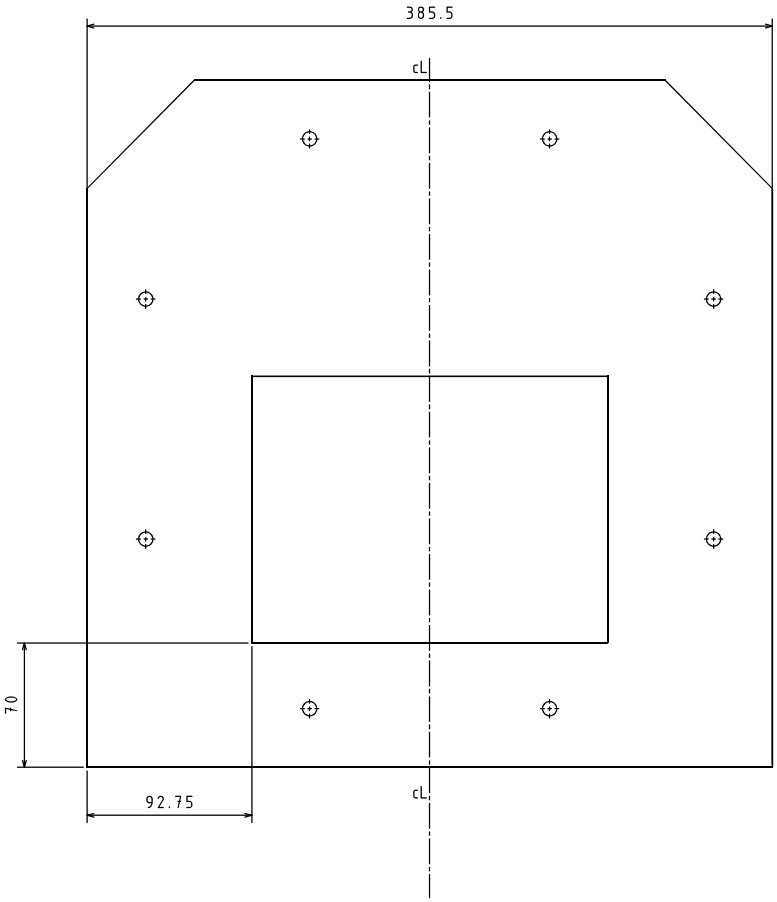

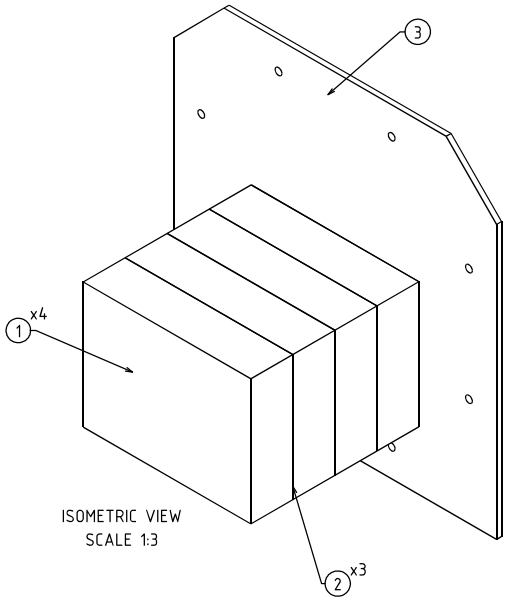

ISOMETRIC VIEW
SCALE 1:3

NOTES:

- PART IS SYMMETRIC ABOUT CENTRELINE
- ABRADE ALL BONDING SURFACES WITH 120 GRIT
- CLEAN BONDING SURFACES WITH IPA AND ALLOW TO FLASH DRY
- BOND USING ADHESIVE AS PER PARTS LIST
- APPLY ADHESIVE TO BONDING SURFACES USING A SPREADER TO ACHIEVE A UNIFORM DISTRIBUTION OF ADHESIVE

UBRacing

A2 | IF IN DOUBT - ASK DO NOT SCALE

TEL. +44 (0)121 414 4218
E-MAIL. ubracing@gmail.com

MATERIAL CERTIFICATE REQUIRED

DIMENSIONS IN MILIMETRES U.O.S

0 DECIMAL PLACES	±0.50
1 DECIMAL PLACE	±0.25
2 DECIMAL PLACES	±0.10
3 DECIMAL PLACES	±0.02
GENERAL CONCENTRICITY	0.1 TIR
ANGULAR TOLERANCE	±0.25°

REMOVE BURRS AND SHARP EDGES

This drawing and the copyright herein are the property of UBRacing. It is private & confidential and is issued on the express condition that it is not modified,copied or communicated to any other party without the written consent of UBRacing.

COMPONENT MASS (kg)	2.45	MATERIAL SPEC	N/A
		HEAT TREATMENT	N/A
DRAWN BY	HCF	SURFACE TREATMENT	N/A
		DESCRIPTION	IMPACT ATTENUATOR ASSEMBLY
SCALE	1:2	SHEET 1/1	PART NUMBER UBR28_CH_N_917

REV	DESCRIPTION	INIT	DATE
01A	INTIAL RELEASE		6/11/24

Item No.	Quantity	Title	Material
1	1	UBR28_CH_N_000_01A-MONOCOQUE	COMPOSITE
2	1	UBR28_CH_N_FRH_01A-FRONT ROLL HOOP	ALUMINIUM 6083
3	1	UBR28_CH_N_011_01A-MAIN ROLL HOOP	MILD STEEL T45
4	2	UBR28_CH_N_015_01A-MRH BRACING	MILD STEEL T45
5	2	UBR28_CH_N_012_01A-MRHB SUPPORT	MILD STEEL T45
6	2	UBR28_CH_N_016_01A-MRH GUSSET	MILD STEEL CR4
7	4	UBR28_CH_N_014_01A_MRH BRACKET	MILD STEEL CR4
8	1	UBR28_CH_N_FW_01A-FIREWALL	COMPOSITE
9	1	UBR28_CH_N_HR_01A-HEADREST	COMPOSITE
10	1	UBR28_CH_N_706_01A-FRONT ACCESS PANEL	COMPOSITE
11	1	UBR28_CH_N_707_01A-REAR ACCESS PANEL	COMPOSITE

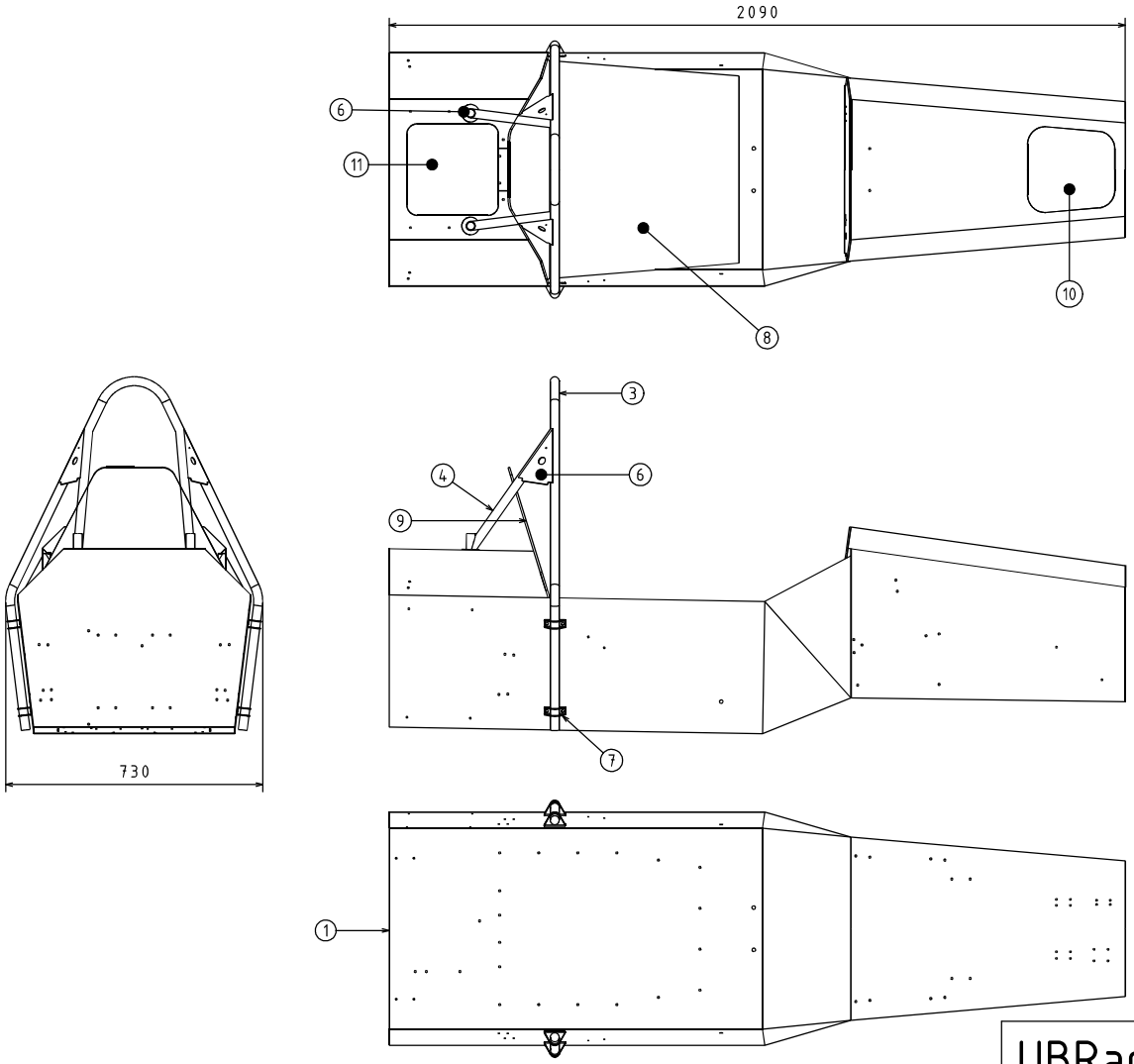

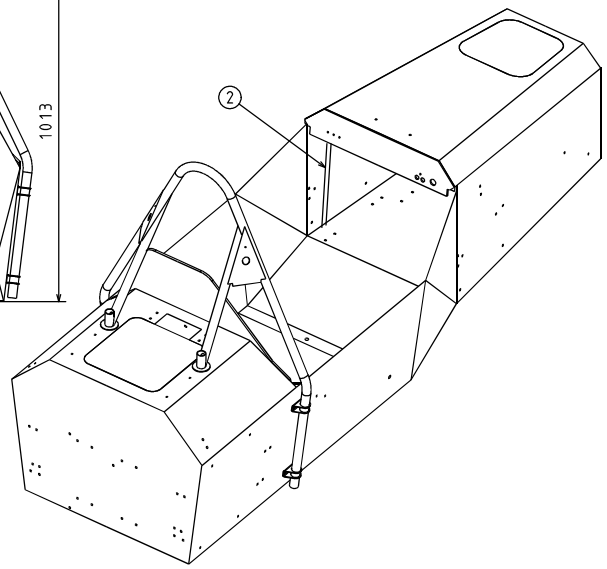

UBRacing

A2

IF IN DOUBT - ASK

DO NOT SCALE

TEL. +44 (0) 121 414 4218

E-MAIL. ubracing@gmail.com

MATERIAL CERTIFICATE REQUIRED

DIMENSIONS IN MILIMETRES U.O.S

0 DECIMAL PLACES	+-0.50
1 DECIMAL PLACES	+-0.25
2 DECIMAL PLACES	+-0.10
3 DECIMAL PLACES	+-0.02
GENERAL CONCENTRICITY	0.1 TIR
ANGULAR TOLERANCE	+-0.25

REMOVE BURRS AND SHARP EDGES

This drawing and the copyright herein are the property of UBRacing. It is private & confidential and is issued on the express condition that it is not modified or communicated to any other party without the written consent of UBRacing

COMPONENT MASS (kg)	-	MATERIAL SPEC/ HEAT TREATMENT	SEE TABLE
DRAWN BY: SK		DESCRIPTION: CHASSIS ASSEMBELY	
		SURFACE TREATMENT	N/A
SCALE	1:10	THRID ANGLE PROJECTION	SHEET 1/1
PART NUMBER	UBR28_CH_N_000_01A		

REV	DESCRIPTION	INIT	DATE
01A	INITIAL RELEASE	LPT	14/06/2025

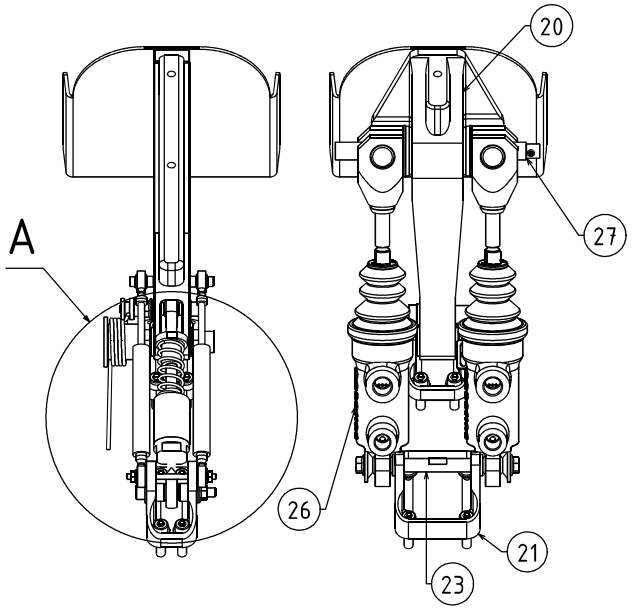

DETAIL VIEW A
(1:1)

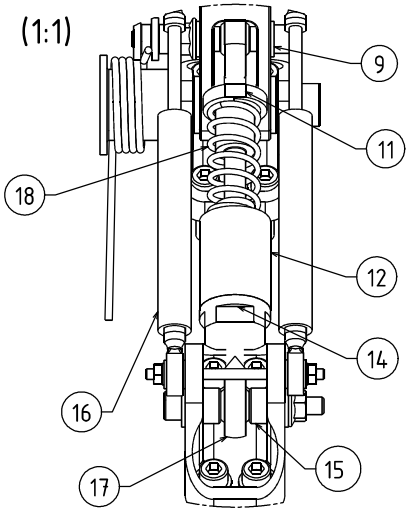

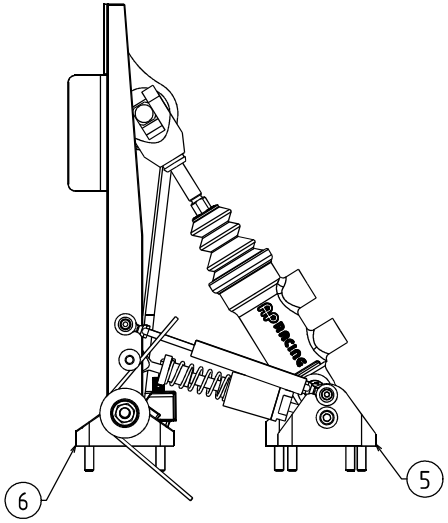

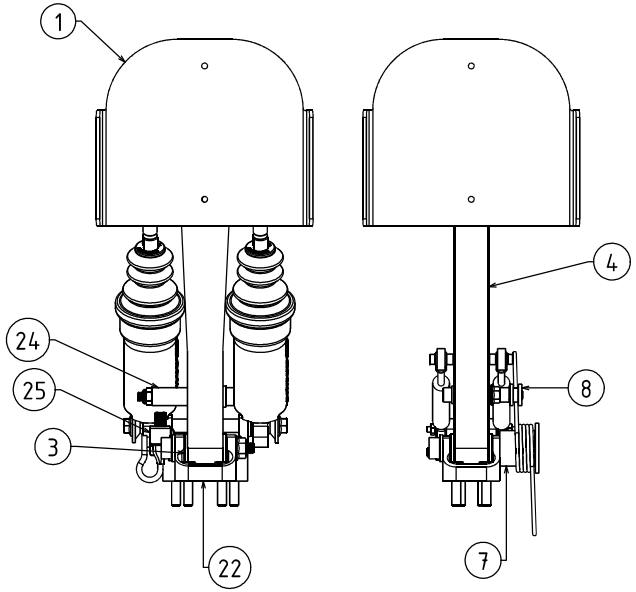

Item	Part No.	Part Name	Qty.
1	UBR28_PB_N_001_01A	TOE CAP	2
2	UBR28_PB_N_002_01A	HEEL REST	1
3	UBR28_PB_N_003_02A	IGUS PEDAL BUSHING	4
4	UBR28_PB_N_101_01A	ACCELERATOR PEDAL ARM	1
5	UBR28_PB_N_102_01A	ACCELERATOR ASSY FRONT CLEVIS	1
6	UBR28_PB_N_103_02A	ACCELERATOR ASSY REAR CLEVIS	1
7	UBR28_PB_N_104_01A	TOR SPRING HOLDER	1
8	UBR28_PB_N_105_01A	TOR SPRING END REST	1
9	UBR28_PB_N_106_01A	TOP HAT PRSD ACCELERATOR PEDAL	2
10	UBR28_PB_N_107_01A	SPACER POT ACCELERATOR PEDAL	2
11	UBR28_PB_N_108_01A	SPRING CAP-UPR-ACCELERATOR PEDAL	1
12	UBR28_PB_N_109_01A	SPRING CAP-LWR-ACCELERATOR PEDAL	1
13	UBR28_PB_N_110_01A	INSERT-SPRING CAP-THROTTLE PEDAL	1
14	UBR28_PB_N_111_01A	SPRING CAP-ROD END	1
15	UBR28_PB_N_112_03A	TOP HAT-CLEVIS-ACCELERATOR PEDAL	2
16	HTL-88386	POTENTIOMETER	2
17	-	ROD END	2
18	-	COMPRESSION SPRING	1
19	-	TORSION SPRING	1
20	UBR28_PB_N_201_03A	BRAKE PEDAL ARM	1
21	UBR28_PB_N_202_01A	FRONT BRAKE ASSY CLEVIS	1
22	UBR28_PB_N_203_02A	REAR BRAKE ASSY CLEVIS	1
23	UBR28_PB_N_204_02A	MCYL BAR-BRAKE PEDAL	1
24	UBR28_PB_N_205_01A	BOTS ACTIVATION BAR	1
25	UBR28_PB_N_206_01A	BOTS BRACKET	1
26	AP CP7855-96PRTE	MASTER CYLINDER	2
27	AP CP5500-4	BALANCE BAR	1

UBRacing

A2

IF IN DOUBT - ASK

DO NOT SCALE

TEL. +44 (0)121 414 4218

E-MAIL. ubracing@gmail.com

This drawing and the copyright herein are the property of UBRacing. It is private & confidential and is issued on the express condition that it is not modified,copied or communicated to any other party without the written consent of UBRacing.

MATERIAL CERTIFICATE REQUIRED

DIMENSIONS IN MILIMETRES U.O.S

0 DECIMAL PLACES	±0.50
1 DECIMAL PLACE	±0.25
2 DECIMAL PLACES	±0.10
3 DECIMAL PLACES	±0.02
GENERAL CONCENTRICITY	0.1 TIR
ANGULAR TOLERANCE	±0.25°

REMOVE BURRS AND SHARP EDGES

COMPONENT MASS (kg)

DRAWN BY LPT

SCALE 1:2

MATERIAL SPEC

HEAT TREATMENT N/A

SURFACE TREATMENT N/A

DESCRIPTION

PEDAL BOX ASSY

SHEET 1/1

PART NUMBER UBR28_PB_000_01A

REV	DESCRIPTION	INIT	DATE
01A	INITIAL RELEASE		

SECTION VIEW C-C
SCALE: 1:1
OOP
TYP. 2

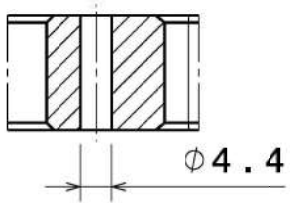

SECTION VIEW B-B
SCALE: 1:1
OOP
TYP. 2

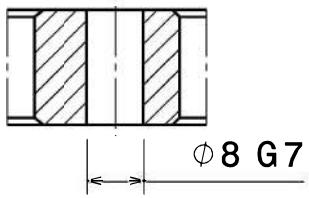

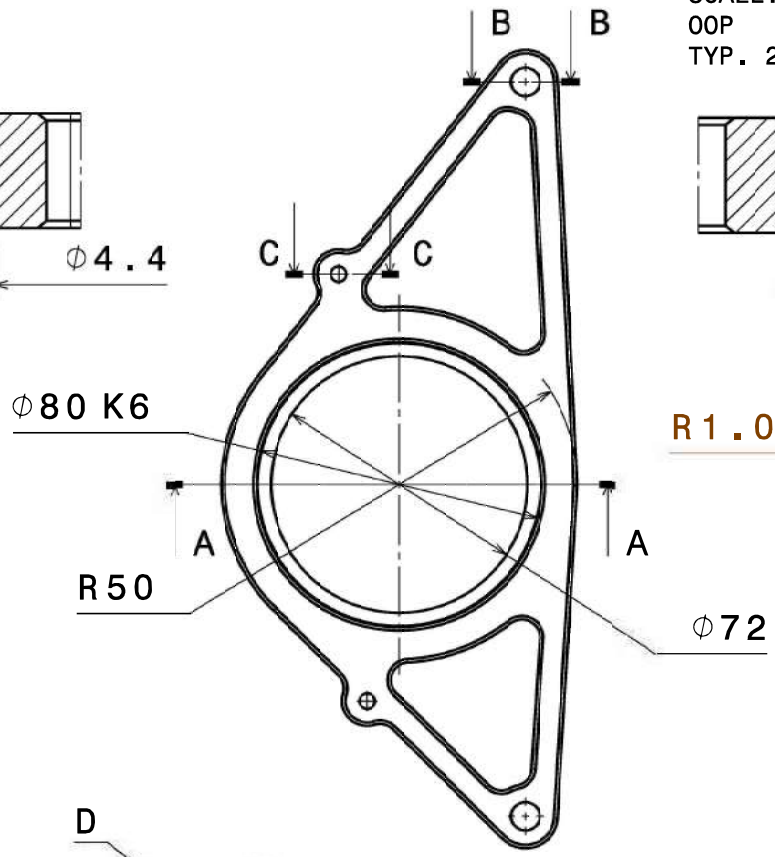

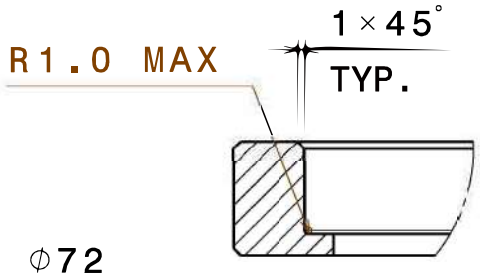

DETAIL D
SCALE: 1:1

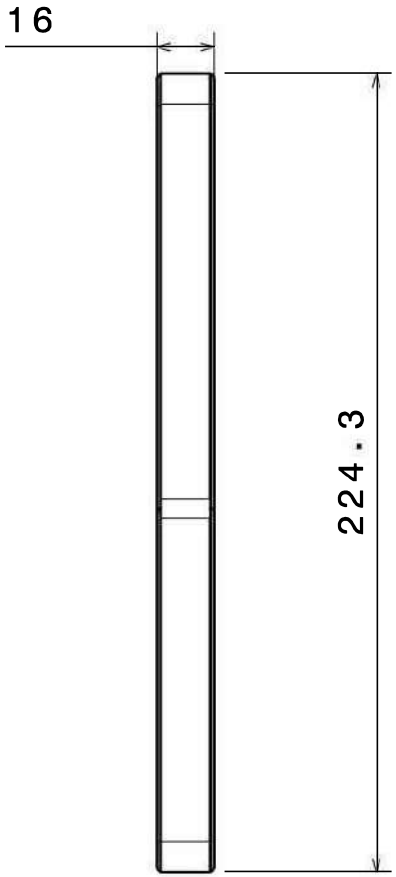

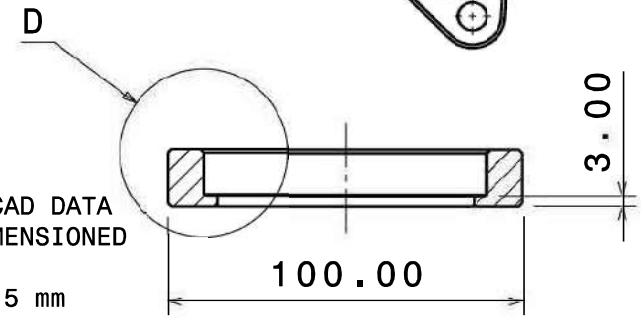

SECTION VIEW A-A
SCALE 1:2

NOTES:
1. REFER TO CAD DATA FOR ALL UNDIMENSIONED GEOMETRY
2. ALL RADII 5 mm UNLESS SPECIFIED
3. ALL CHAMFERS 1 X 45°

UBRacing	MATERIAL CERTIFICATE REQUIRED DIMENSIONS IN MILIMETRES U.O.S	COMPONENT MASS (kg)	0.272	MATERIAL SPEC	ALUMINIUM 7075-T6
				HEAT TREATMENT	N/A
A4	IF IN DOUBT - ASK DO NOT SCALE	DRAWN BY	TLR	SURFACE TREATMENT	N/A
	0 DECIMAL PLACES ±0.50 1 DECIMAL PLACE ±0.25 2 DECIMAL PLACES ±0.10 3 DECIMAL PLACES ±0.02 GENERAL CONCENTRICITY 0.1 TIR ANGULAR TOLERANCE ±0.25°			DESCRIPTION	SS DIFF HANGER
TEL.	+44 (0)121 414 4218				
E-MAIL.	ubracing@gmail.com				
	REMOVE BURRS AND SHARP EDGES				
		SCALE	1:2	SHEET 1/1	PART NUMBER UBR28_DR_L_231_01A

This drawing and the copyright herein are the property of UBRacing. It is private & confidential and is issued on the express condition that it is not modified, copied or communicated to any other party without the written consent of UBRacing.

REV	DESCRIPTION	INIT	DATE
01A	INITIAL RELEASE	GA	28/02/2025

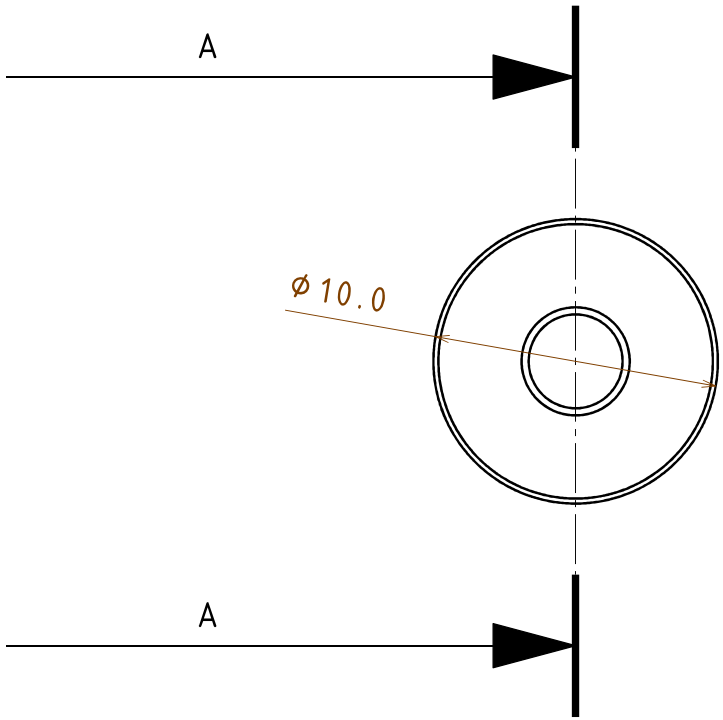

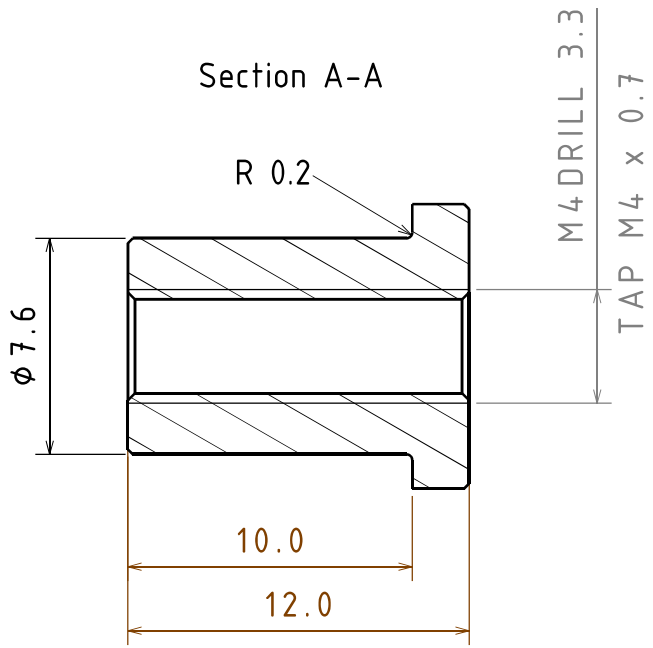

NOTES:

1 - CHAMFER ALL EDGES 0.25 x 45°
2 - 4 OF THESE NEEDED

UBRacing	MATERIAL CERTIFICATE REQUIRED DIMENSIONS IN MILIMETRES U.O.S	COMPONENT MASS (kg)	0.001	MATERIAL SPEC	ALUMINIUM 6082
				HEAT TREATMENT	N/A
A4	IF IN DOUBT - ASK DO NOT SCALE 0 DECIMAL PLACES ±0.50 1 DECIMAL PLACE ±0.25 2 DECIMAL PLACES ±0.10 3 DECIMAL PLACES ±0.02 GENERAL CONCENTRICITY 0.1 TIR ANGULAR TOLERANCE ±0.25°	DRAWN BY GA		SURFACE TREATMENT	N/A
				DESCRIPTION	CROSSBAR INSERT
TEL.	+44 (0)121 414 4218				
E-MAIL.	ubracing@gmail.com				
	REMOVE BURRS AND SHARP EDGES				
This drawing and the copyright herein are the property of UBRacing. It is private & confidential and is issued on the express condition that it is not modified, copied or communicated to any other party without the written consent of UBRacing.		SCALE	4:1	SHEET 1/1	PART NUMBER UBR28_DR_N_272_01A

REV	DESCRIPTION	INIT	DATE
01A	INITIAL RELEASE	GA	25/12/2024

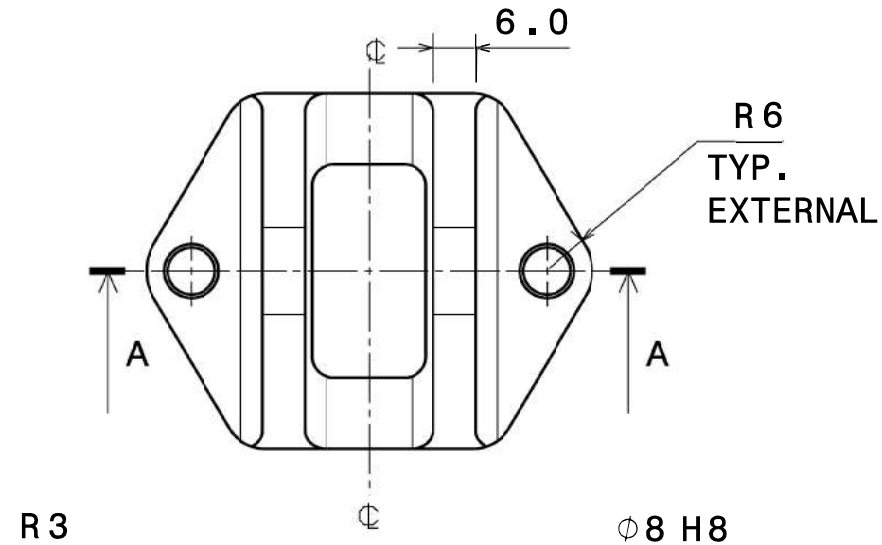

SECTION VIEW: A-A

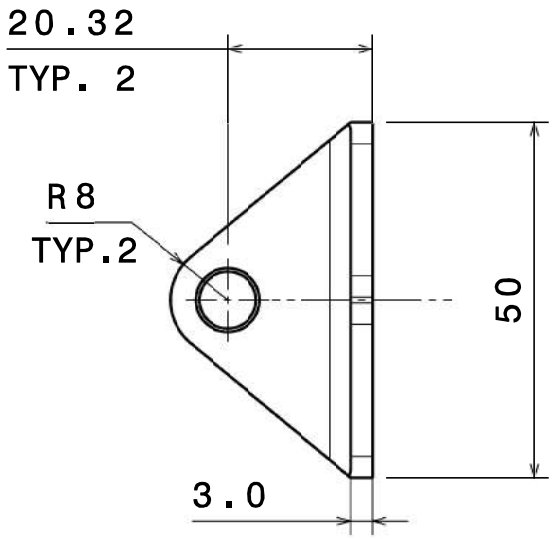

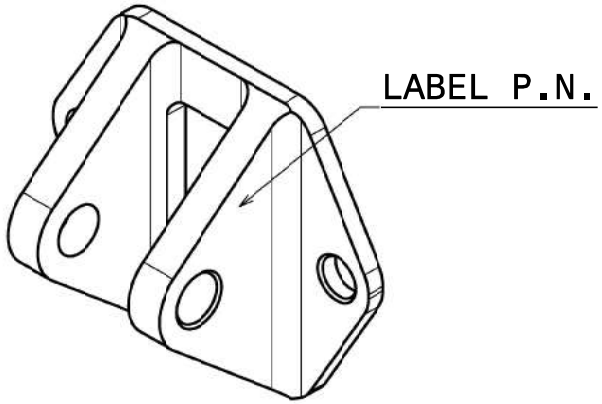

ISOMETRIC VIEW

NOTES:

1. FOR ALL UNDIMENSIONED FEATURES, REFER TO CAD DATA
2. PART SYMMETRICAL ABOUT A-A & ℄
3. PART NUMBER POST ANODISED
4. BREAK SHARP EDGES

UBRacing	MATERIAL CERTIFICATE REQUIRED DIMENSIONS IN MILIMETRES U.O.S	COMPONENT MASS (kg)	0.040	MATERIAL SPEC	ALUMINIUM 7075-T6
				HEAT TREATMENT	N/A
A4	IF IN DOUBT - ASK DO NOT SCALE	0 DECIMAL PLACES ±0.50 1 DECIMAL PLACE ±0.25 2 DECIMAL PLACES ±0.10 3 DECIMAL PLACES ±0.02 GENERAL CONCENTRICITY 0.1 TIR ANGULAR TOLERANCE ±0.25°	DRAWN BY TLR	SURFACE TREATMENT	SULPHURIC ACID ANODISE (BLUE)
				DESCRIPTION	DIFF HANGER CLEVIS
TEL.	+44 (0)121 414 4218				
E-MAIL.	ubracing@gmail.com	REMOVE BURRS AND SHARP EDGES			
This drawing and the copyright herein are the property of UBRacing. It is private & confidential and is issued on the express condition that it is not modified, copied or communicated to any other party without the written consent of UBRacing.		SCALE	1:1	SHEET 1/1	PART NUMBER UBR28_DR_N_311_01A

REV	DESCRIPTION	INIT	DATE
01B	INITIAL RELEASE	GA	09/01/2025

EXTERNAL INVOLUTE SPLINE DATA	
REFERENCE DIAMETER	22.54
MODULE	1.00
PITCH	30
NUMBER OF TEETH	20
CLASS OF FIT	6h

PART	PART. NO	x [mm]
SS	UBR28_DR_L_413_01A	330.34
NSS	UBR28_DR_R_513_01A	364.38

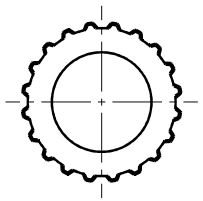

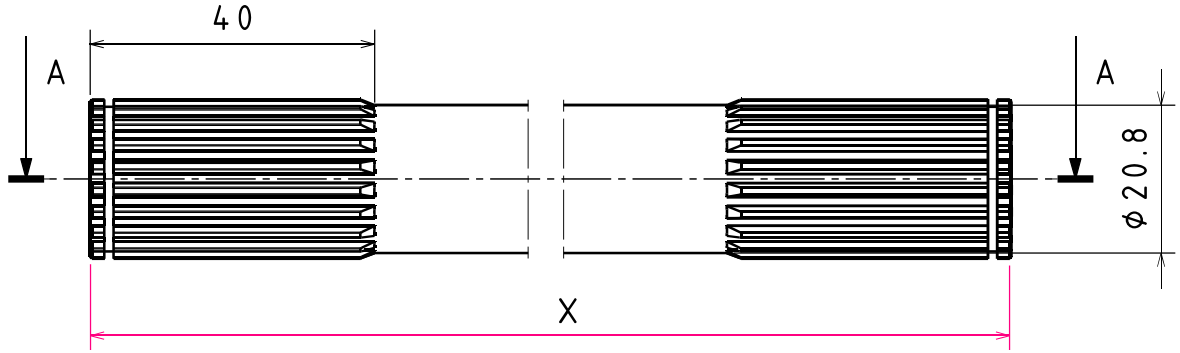

DETAIL B
SCALE - 2:1

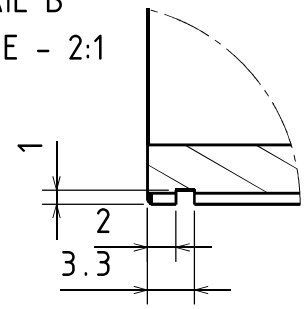

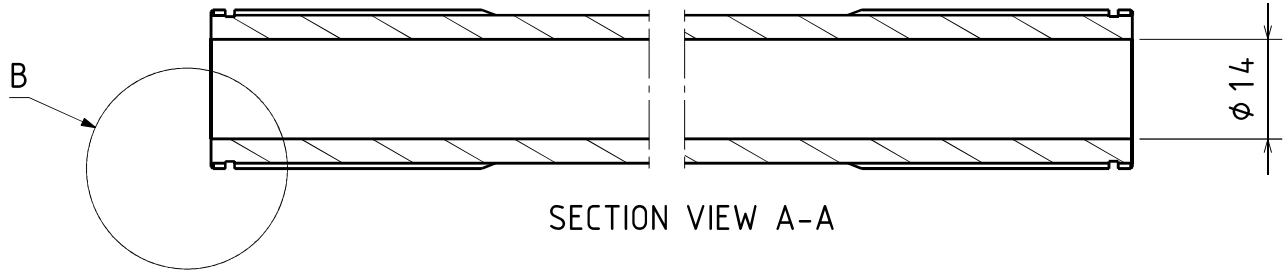

SECTION VIEW A-A

NOTES:
1 - CHAMFER EXTERNAL EDGES 0.5 X 45
2 - CUT SPLINE TO DIN 5480
3 - PART SYMMETRICAL ABOUT CENTRELINE AND BROKEN VIEW

UBRacing	MATERIAL CERTIFICATE REQUIRED DIMENSIONS IN MILIMETRES U.O.S	COMPONENT MASS (kg)	GIVEN IN TABLE	MATERIAL SPEC	EN30B
A4	IF IN DOUBT - ASK DO NOT SCALE	0 DECIMAL PLACES ±0.50 1 DECIMAL PLACE ±0.25 2 DECIMAL PLACES ±0.10 3 DECIMAL PLACES ±0.02 GENERAL CONCENTRICITY 0.1 TIR ANGULAR TOLERANCE ±0.25°	DRAWN BY GA	HEAT TREATMENT	N/A
				SURFACE TREATMENT	N/A
TEL.	+44 (0)121 414 4218			DESCRIPTION	DRIVESHAFTS
E-MAIL.	ubracing@gmail.com	REMOVE BURRS AND SHARP EDGES			
			SCALE 1:1	SHEET 1/1	PART NUMBER GIVEN IN TABLE

This drawing and the copyright herein are the property of UBRacing. It is private & confidential and is issued on the express condition that it is not modified, copied or communicated to any other party without the written consent of UBRacing.

REV	DESCRIPTION	INIT	DATE
01A	INITIAL RELEASE	SGC	23/05/2025

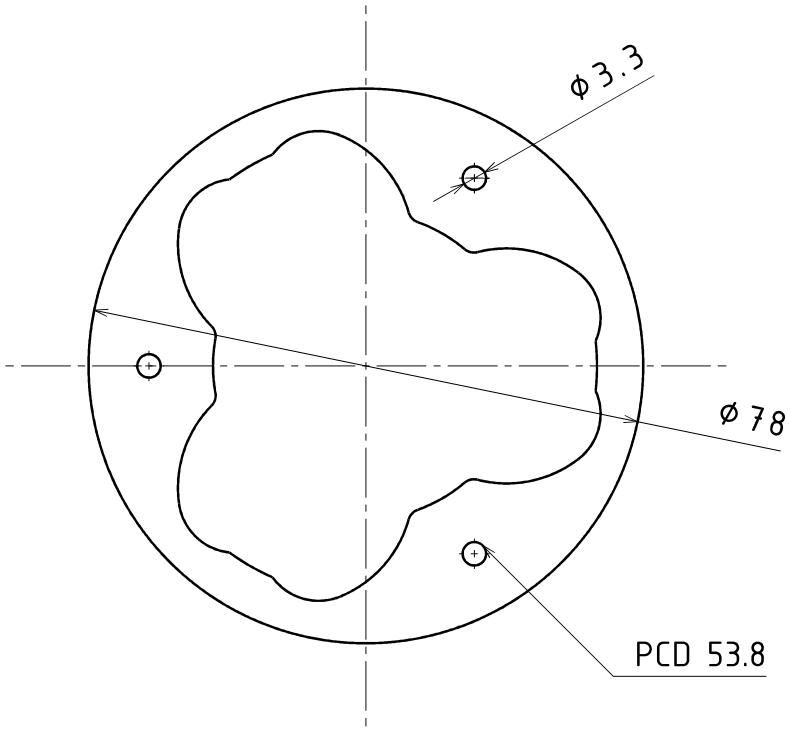

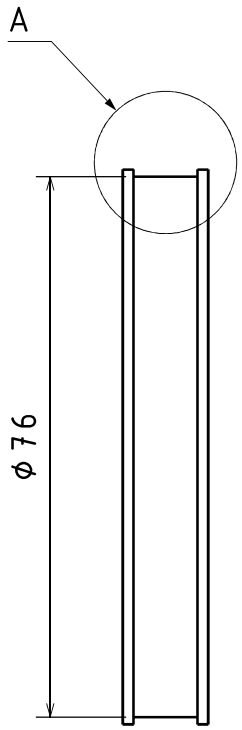

DETAIL VIEW A (2:1)

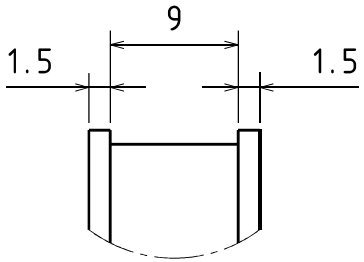

NOTES:

1 - FOR ALL UNDIMENSIONED FEATURES, REFER TO CAD DATA

2 - ALL BOLT HOLES HAVE THE SAME GEOMETRY

UBRacing	MATERIAL CERTIFICATE REQUIRED DIMENSIONS IN MILIMETRES U.O.S	COMPONENT MASS (kg)	0.0137	MATERIAL SPEC	PLA
A4	IF IN DOUBT - ASK DO NOT SCALE	0 DECIMAL PLACES ±0.50 1 DECIMAL PLACE ±0.25 2 DECIMAL PLACES ±0.10 3 DECIMAL PLACES ±0.02 GENERAL CONCENTRICITY 0.1 TIR ANGULAR TOLERANCE ±0.25°	DRAWN BY GA	HEAT TREATMENT	N/A
				SURFACE TREATMENT	N/A
TEL.	+44 (0)121 414 4218			DESCRIPTION	CV BOOT ADAPTOR
E-MAIL.	ubracing@gmail.com	REMOVE BURRS AND SHARP EDGES			
	This drawing and the copyright herein are the property of UBRacing. It is private & confidential and is issued on the express condition that it is not modified, copied or communicated to any other party without the written consent of UBRacing.	SCALE	1:1	SHEET 1/1	PART NUMBER UBR28_DR_N_413_01A

REV	DESCRIPTION	INIT	DATE
01A	INITIAL RELEASE	GA	02/06/2025

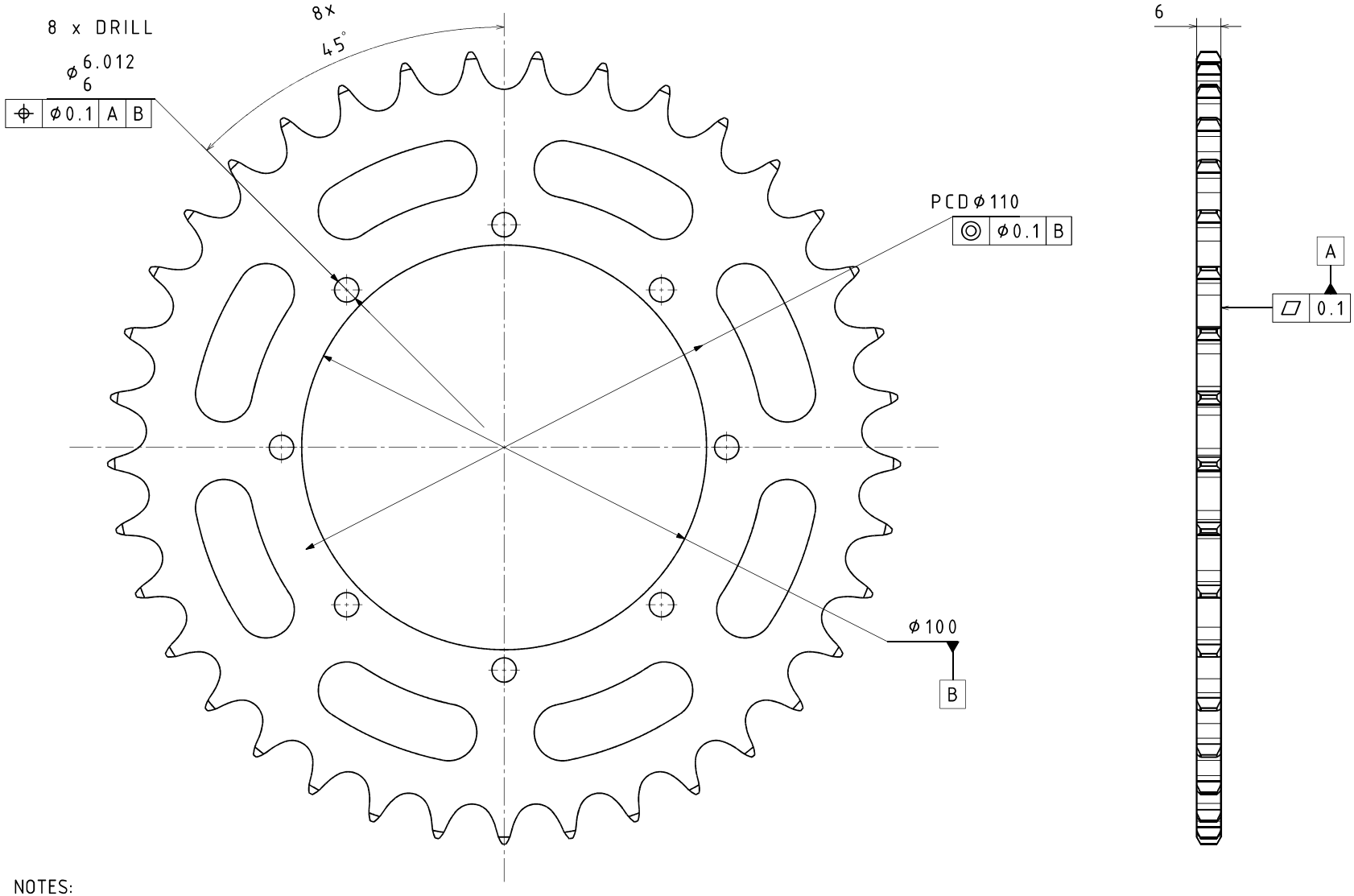

NOTES:

1 - TEETH AND POCKET GEOMETRY TO BE LASER CUT FROM CAD
2 - BOLT HOLES TO BE REAMED USING ISC1813169
3 - BREAK ALL SHARP EDGES
4 - REFER TO CAD FOR ANY UNDIMENSIONED FEATURES
5 - GENERAL TOLERANCES IN TABLE (LOC, C2)

UBRacing	MATERIAL CERTIFICATE REQUIRED DIMENSIONS IN MILIMETRES U.O.S	COMPONENT MASS (kg)	0.130	MATERIAL SPEC	7075-T6
				HEAT TREATMENT	N/A
A3	IF IN DOUBT - ASK DO NOT SCALE	DRAWN BY	GA	SURFACE TREATMENT	SHOT-PEENED & ANODISATION
				DESCRIPTION	SPROCKET
TEL.	+44 (0)121 414 4218				
E-MAIL.	ubracing@gmail.com				
		SCALE	1:1	SHEET 1/1	PART NUMBER UBR28_DR_N_621_02D

0 DECIMAL PLACES	±0.50
1 DECIMAL PLACE	±0.25
2 DECIMAL PLACES	±0.10
3 DECIMAL PLACES	±0.02
GENERAL CONCENTRICITY	0.1 TIR
ANGULAR TOLERANCE	±0.25°
REMOVE BURRS AND SHARP EDGES	

This drawing and the copyright herein are the property of UBRacing. It is private & confidential and is issued on the express condition that it is not modified,copied or communicated to any other party without the written consent of UBRacing.

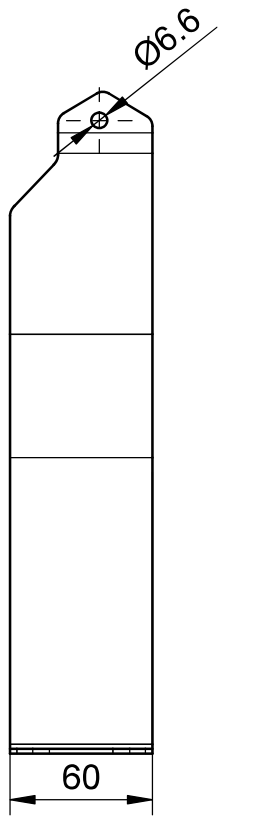

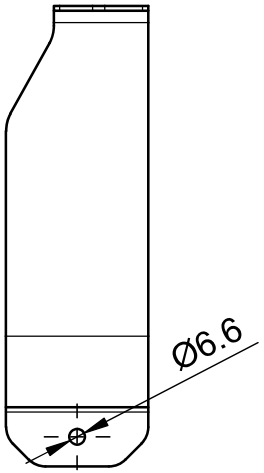

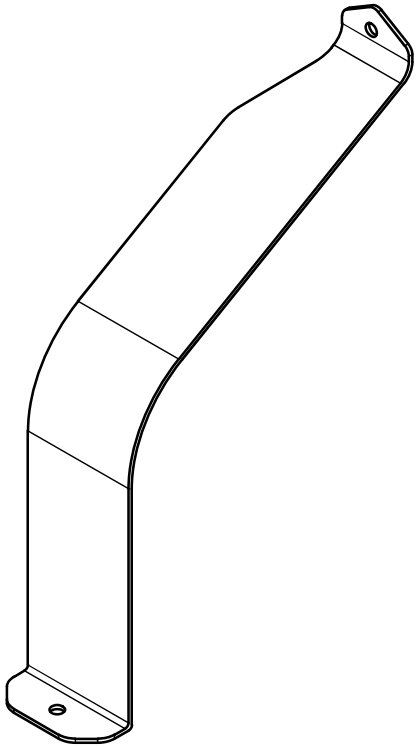

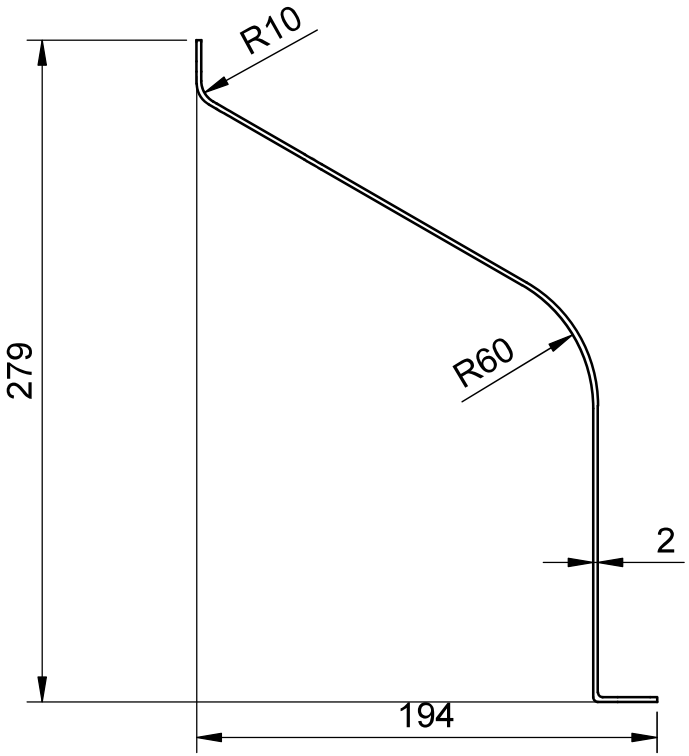

UBRacing	Tolerances 0 D.P ±0.50 1 D.P ±0.25 2 D.P ±0.10 3 D.P ±0.02 Angular ±0.25°	Component Mass (kg)	0.224	Material	Steel CR4
				Heat Treatment	N/A
A4 Do Not Scale		Drawn By: SCB		Surface Treatment	N/A
E-Mail Contact:				Description	Internal Chain Guard
ubracing@gmail.com	Remove Burrs & Sharp Edges				
This drawing and the copyright herein are the property of UBRacing. It is private & confidential and is issued on the express condition that it is not modified, copied or communicated to any other party without the written consent of UBRacing		Scale	1:3	Sheet: 1/1	Part Number UBR28_DR_N_615_01C

REV	DESCRIPTION	INIT	DATE
01A	INITIAL RELEASE	GA	01/04/2025

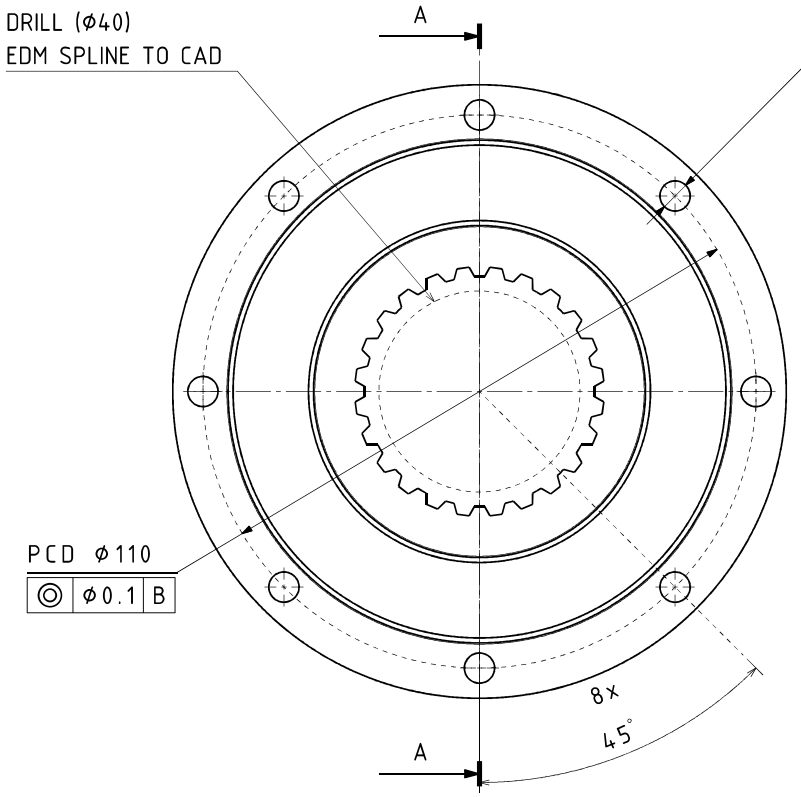

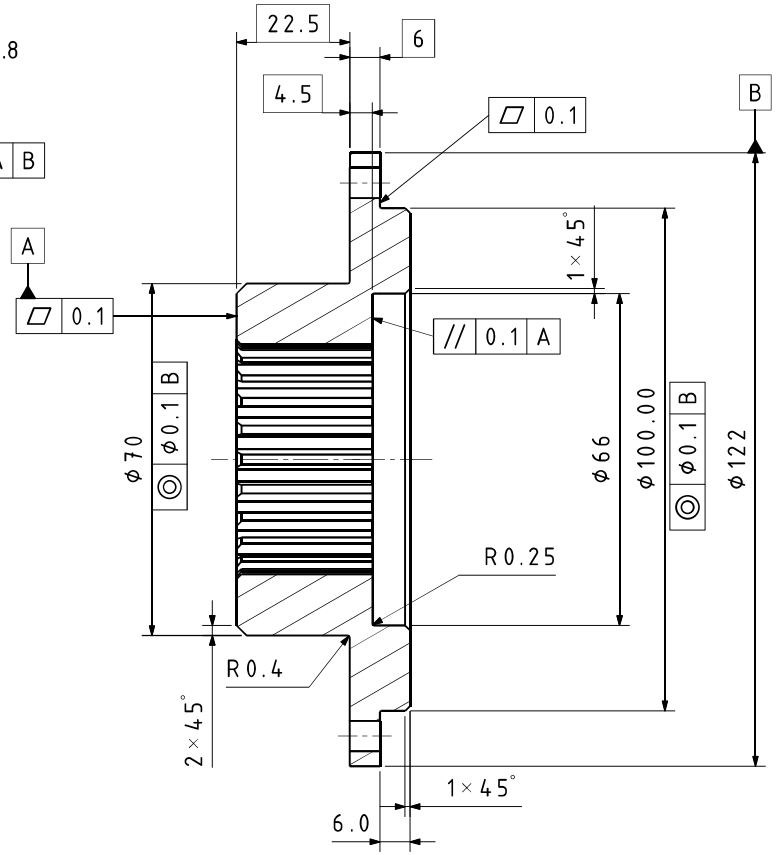

SECTION A-A

NOTES:

1 - EDM SPLINE TO CAD
2 - HOLES TO BE REAMED WITH ISC1813169
3 - Ø100 mm FLANGE TO BE CUSTOM FIT TO UBR28_PT_N_613_02C
4 - BREAK ALL SHARP EDGES
5 - REFER TO CAD FOR ANY UNDIMENSIONED FEATURES ⌓ 0.2
6 - GENERAL TOLERANCES IN TABLE (LOC, C2)

UBRacing	MATERIAL CERTIFICATE REQUIRED DIMENSIONS IN MILIMETRES U.O.S	COMPONENT MASS (kg)	0.283	MATERIAL SPEC	7075-T6
				HEAT TREATMENT	N/A
A3	IF IN DOUBT - ASK DO NOT SCALE	DRAWN BY	GA	SURFACE TREATMENT	ANODISATION
	0 DECIMAL PLACES ±0.50 1 DECIMAL PLACE ±0.25 2 DECIMAL PLACES ±0.10 3 DECIMAL PLACES ±0.02 GENERAL CONCENTRICITY 0.1 TIR ANGULAR TOLERANCE ±0.25° REMOVE BURRS AND SHARP EDGES			DESCRIPTION	SPROCKET HOUSING
TEL.	+44 (0)121 414 4218				
E-MAIL.	ubracing@gmail.com				
	This drawing and the copyright herein are the property of UBRacing. It is private & confidential and is issued on the express condition that it is not modified,copied or communicated to any other party without the written consent of UBRacing.	SCALE	1:1	SHEET 1/1	PART NUMBER UBR28_DR_N_622_02C

REV	DESCRIPTION	INIT	DATE
01A	INITIAL RELEASE		

SECTION VIEW B-B
SCALE: 1:1
OOP
TYP. 2

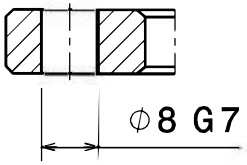

SECTION VIEW C-C
SCALE: 1:1
OOP
TYP. 2

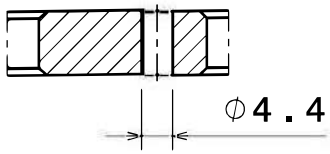

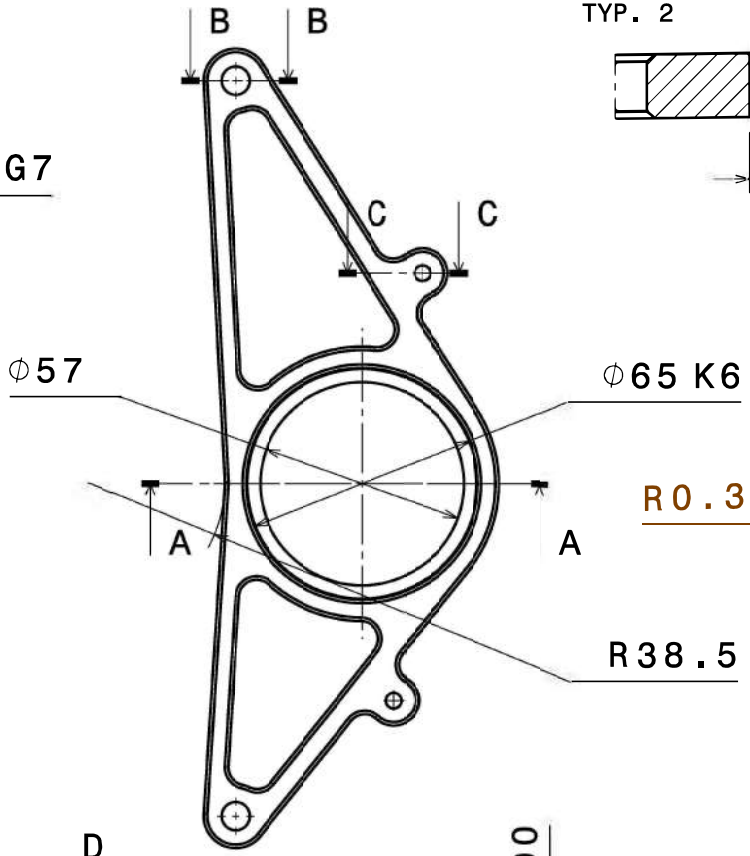

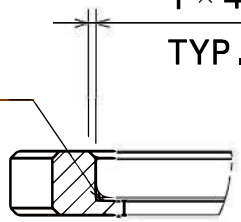

DETAIL D
SCALE: 1:1

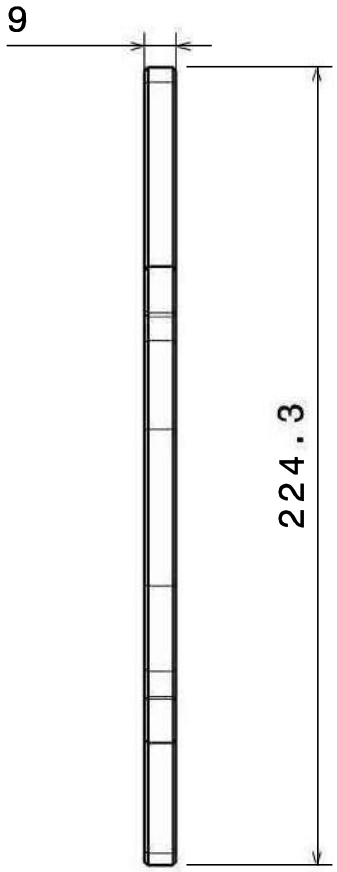

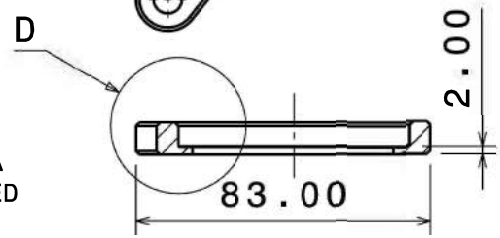

SECTION VIEW A-A
SCALE: 1:2

NOTES:
1. REFER TO CAD DATA FOR ALL UNDIMENSIONED GEOMETRY
2. ALL RADII 5 mm UNLESS SPECIFIED
3. ALL CHAMFERS 1 X 45°

UBRacing

A4

IF IN DOUBT - ASK

DO NOT SCALE

TEL. +44 (0)121 414 4218

E-MAIL. ubracing@gmail.com

MATERIAL CERTIFICATE REQUIRED

DIMENSIONS IN MILIMETRES U.O.S

0 DECIMAL PLACES	±0.50
1 DECIMAL PLACE	±0.25
2 DECIMAL PLACES	±0.10
3 DECIMAL PLACES	±0.02
GENERAL CONCENTRICITY	0.1 TIR
ANGULAR TOLERANCE	±0.25°

REMOVE BURRS AND SHARP EDGES

COMPONENT MASS (kg): 0.113

DRAWN BY: TLR

MATERIAL SPEC: ALUMINIUM 7075-T6

HEAT TREATMENT: N/A

SURFACE TREATMENT: N/A

DESCRIPTION: NSS DIFF HANGER

SCALE: 1:2

SHEET 1/1

PART NUMBER: UBR28_DR_R_241_01A

This drawing and the copyright herein are the property of UBRacing. It is private & confidential and is issued on the express condition that it is not modified, copied or communicated to any other party without the written consent of UBRacing.

REV	DESCRIPTION	INIT	DATE
01A	INITIAL RELEASE	TLR	11/04/24

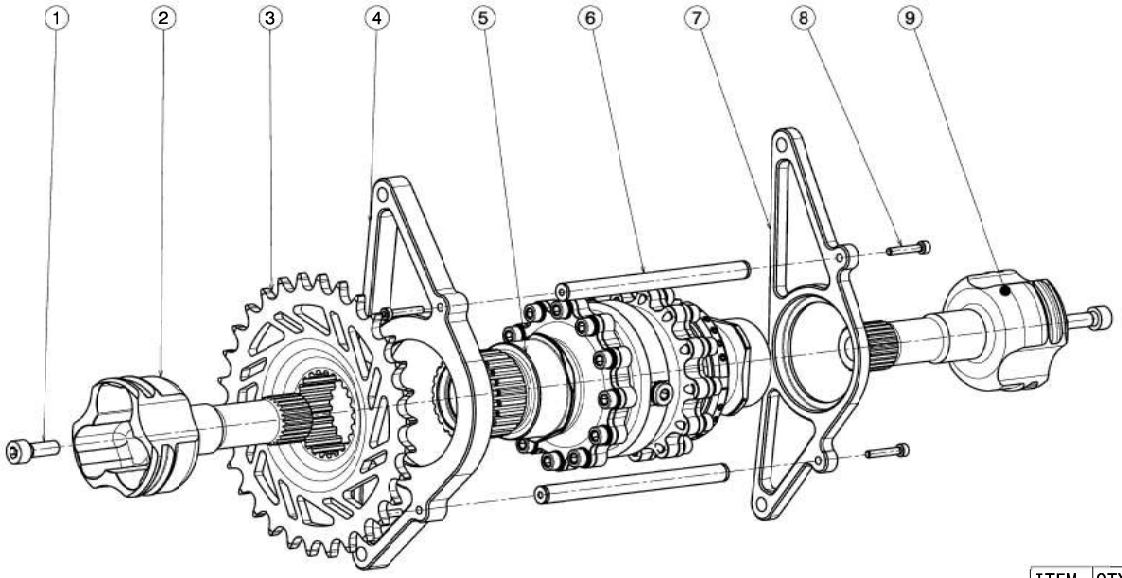

ITEM	QTY	PART NO.	DESCRIPTION
1	2	UBR28_DR_N_003	TRIPOD HOUSING RETAINING BOLT - M8X1.25X25
2	1	UBR28_DR_L_601	SPROCKET SIDE TRIPOD HOUSING
3	1	UBR28_DR_N_703	DRIVEN SPROCKET (30 TOOTH)
4	1	UBR28_DR_L_302	SPROCKET SIDE HANGER
5	1	UBR28_DR_N_400	DREXLER FSAE V3
6	1	UBR28_DR_N_500	CROSSBAR
7	1	UBR28_DR_R_302	NON-SPROCKET SIDE HANGER
8	4	UBR28_DR_N_004	CROSSBAR BOLT - M4X0.7X25
9	1	UBR28_DR_R_601	NON-SPROCKET SIDE TRIPOD HOUSING

UBRacing

A2

IF IN DOUBT - ASK

DO NOT SCALE

TEL. +44 (0)121 414 4218

E-MAIL. ubracing@gmail.com

MATERIAL CERTIFICATE REQUIRED

DIMENSIONS IN MILIMETRES U.O.S

0 DECIMAL PLACES	±0.50
1 DECIMAL PLACE	±0.25
2 DECIMAL PLACES	±0.10
3 DECIMAL PLACES	±0.02
GENERAL CONCENTRICITY	0.1 TIR
ANGULAR TOLERANCE	±0.25°

REMOVE BURRS AND SHARP EDGES

COMPONENT MASS (kg): 10.20

MATERIAL SPEC: ASSY

HEAT TREATMENT: N/A

SURFACE TREATMENT: N/A

DRAWN BY: TLR

DESCRIPTION: DRIVETRAIN ASSY

SCALE: 1:2

SHEET: 1/1

PART NUMBER: UBR28_DR_000

This drawing and the copyright herein are the property of UBRacing. It is private & confidential and is issued on the express condition that it is not modified,copied or communicated to any other party without the written consent of UBRacing.

ITEM NO.	QTY.	PART NO.	DESRIPTION	MATERIAL
1	1	UBR28_DR_N_621_01A	DRIVEN SPOCKET	ALUMINIUM
2	1	UBR28_DR_N_622_01A	SPROCKET HOUSING	ALUMINIUM
3	8	UBR28_DR_N_623_01A	SHOULDER BOLT M5 x12	STEEL
4	8	UBR28_DR_N_624_01A	M5 NUT	STEEL

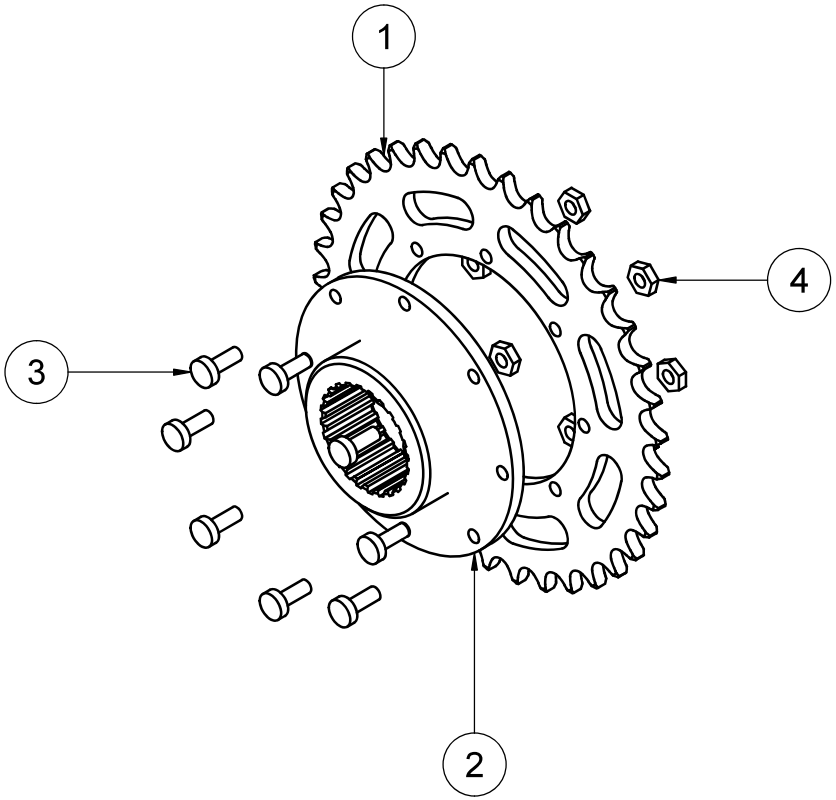

UBRacing	Tolerances 0 D.P ±0.50 1 D.P ±0.25 2 D.P ±0.10 3 D.P ±0.02 Angular ±0.25°	Component Mass (kg)	0.303	Material	SEE TABLE
A3 Do Not Scale		Drawn By: SCB		Heat Treatment	N/A
				Surface Treatment	N/A
E-Mail Contact: ubracing@gmail.com	Remove Burrs & Sharp Edges			Description	Driven Sprocket Assembly
This drawing and the copyright herein are the property of UBRacing. It is private & confidential and is issued on the express condition that it is not modified, copied or communicated to any other party without the written consent of UBRacing		Scale	1:2	Sheet: 1/1	Part Number UBR28_DR_N_620

ITEM NO.	QTY	PART NUMBER	DESCRIPTION	MATERIAL
1	1	UBR28_DR_N_631_01C	CLEVIS	ALUMINIUM
2	2	UBR28_DR_N_632_01C	ARMS	ALUMINIUM
3	1	UBR28_DR_N_633_01C	ROLLER	IGUS
4	2	UBR28_DR_N_634_01C	TOP-HAT BUSHING	IGUS
5	1	UBR28_DR_N_635_01C	TORSION SPRING SPACER	IGUS
6	2	UBR28_DR_N_636_01C	BEARNG	N/A
7	1	UBR28_DR_N_637_01C	TORSION SPRING	N/A
8	1	UBR28_DR_N_638_01C	BEARING SPACER	STEEL
9	1	UBR28_DR_N_639_01C	SHOULDER BOLT M6x40	N/A
10	1	UBR28_DR_N_640_01C	SHOULDER BOLT M8x30	N/A
11	1	UBR28_DR_N_641_01C	M5 WASHER	STEEL
12	1	UBR28_DR_N_642_01C	M5 NYLOC	STEEL
13	1	UBR28_DR_N_643_01C	M7 WASHER	STEEL
14	1	UBR28_DR_N_644_01C	M7 NYLOC	STEEL

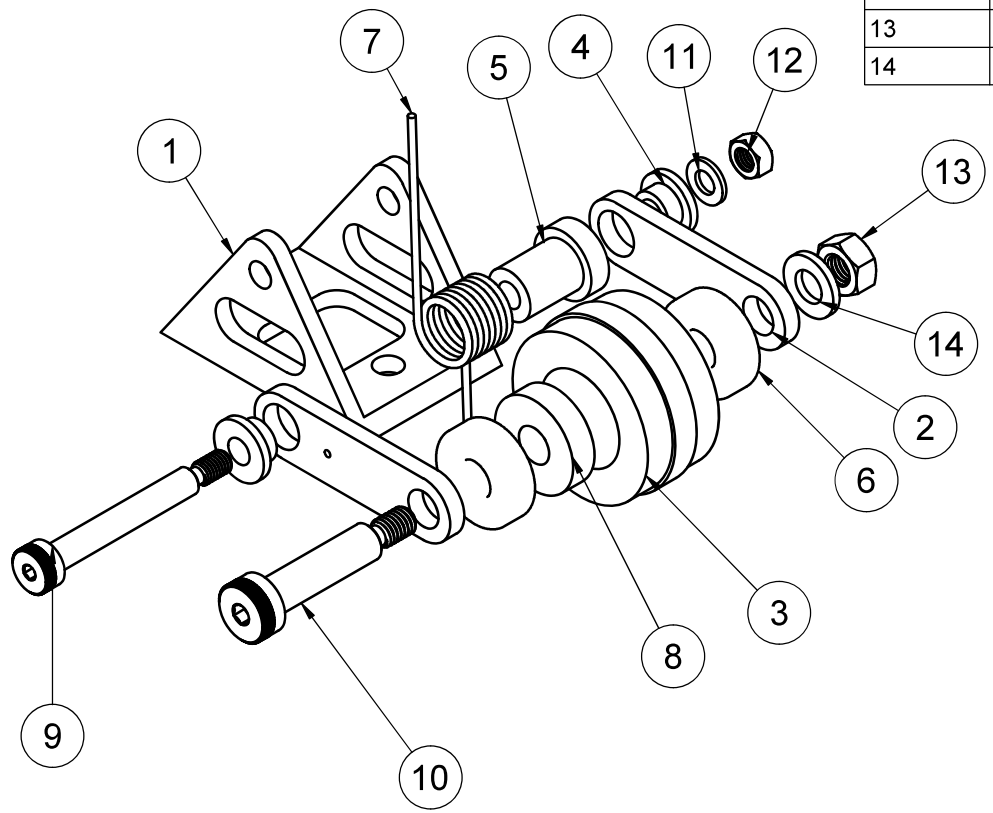

UBRacing	Tolerances 0 D.P ±0.50 1 D.P ±0.25 2 D.P ±0.10 3 D.P ±0.02 Angular ±0.25°	Component Mass (kg)	0.282	Material	See Table
A3 Do Not Scale		Drawn By: SCB		Heat Treatment	N/A
				Surface Treatment	N/A
E-Mail Contact: ubracing@gmail.com	Remove Burrs & Sharp Edges			Description	Chain Tensioner Assembly
This drawing and the copyright herein are the property of UBRacing. It is private & confidential and is issued on the express condition that it is not modified, copied or communicated to any other party without the written consent of UBRacing		Scale	1:1	Sheet: 1/1	Part Number UBR28_DR_N_630_01C

REV	DESCRIPTION	INIT	DATE
01A	INITIAL RELEASE	CRH	

ITEM	UBR PN	QTY	DESC
1	N/A	AS REQD.	ONYX FR CC
2	UBR28_AC_N_004_01A	9	M4 AEROTIGHT NUT

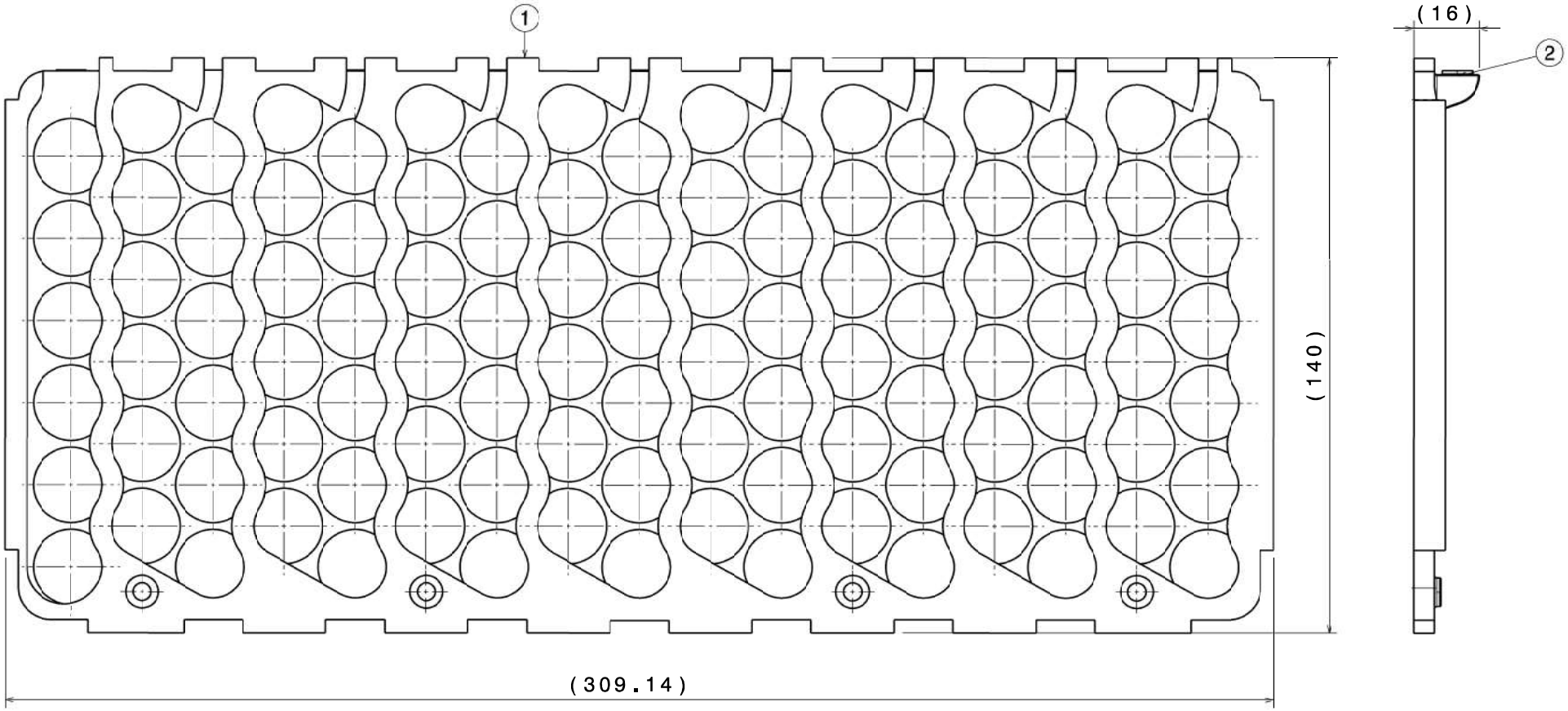

NOTES:
1. PRINT ON MARKFORGED MARK 2
2. MAT'L TO BE ONYX FR CC
3. PROCESS TOLERANCES FROM CAD DATA
4. INSERT ITEM 2 DURING PRINT

UBRacing

A3

IF IN DOUBT - ASK

DO NOT SCALE

TEL. +44 (0)121 414 4218

E-MAIL. ubracing@gmail.com

MATERIAL CERTIFICATE REQUIRED

DIMENSIONS IN MILIMETRES U.O.S

0 DECIMAL PLACES	±0.50
1 DECIMAL PLACE	±0.25
2 DECIMAL PLACES	±0.10
3 DECIMAL PLACES	±0.02
GENERAL CONCENTRICITY	0.1 TIR
ANGULAR TOLERANCE	±0.25°

REMOVE BURRS AND SHARP EDGES

This drawing and the copyright herein are the property of UBRacing. It is private & confidential and is issued on the express condition that it is not modified,copied or communicated to any other party without the written consent of UBRacing.

COMPONENT MASS (kg)	0.072	MATERIAL SPEC	SEE NOTES
		HEAT TREATMENT	N/A
DRAWN BY	CRH	SURFACE TREATMENT	N/A
		DESCRIPTION	MODULE WALL
SCALE	1:1	SHEET	1/1
		PART NUMBER	UBR28_AC_N_201

REV	DESCRIPTION	INIT	DATE
01A	INITIAL RELEASE	CRH	

ITEM	UBR PN	QTY	DESC
1	N/A	AS REQD.	ONYX FR CC
2	UBR28_AC_N_003_01A	6	M5 AEROTIGHT NUT
3	UBR28_AC_N_004_01A	8	M4 AEROTIGHT NUT

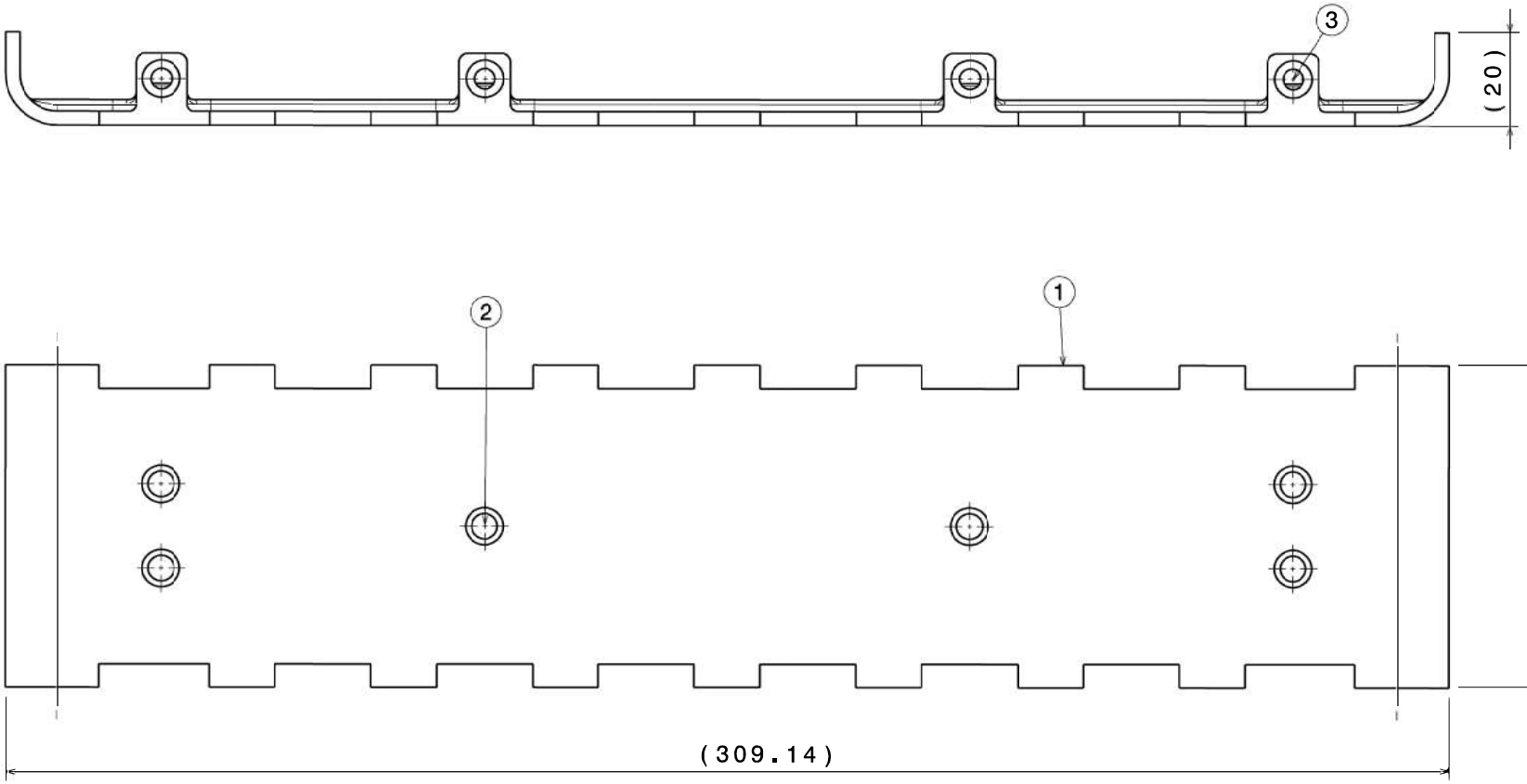

NOTES:
1. PRINT ON MARKFORGED MARK 2
2. MAT'L TO BE ONYX FR CC
3. PROCESS TOLERANCES FROM CAD DATA
4. INSERT ITEMS 2 AND 3 DURING PRINT

UBRacing

A3

IF IN DOUBT - ASK

DO NOT SCALE

TEL. +44 (0)121 414 4218
E-MAIL. ubracing@gmail.com

MATERIAL CERTIFICATE REQUIRED

DIMENSIONS IN MILIMETRES U.O.S

0 DECIMAL PLACES	±0.50
1 DECIMAL PLACE	±0.25
2 DECIMAL PLACES	±0.10
3 DECIMAL PLACES	±0.02
GENERAL CONCENTRICITY	0.1 TIR
ANGULAR TOLERANCE	±0.25°

REMOVE BURRS AND SHARP EDGES

This drawing and the copyright herein are the property of UBRacing. It is private & confidential and is issued on the express condition that it is not modified,copied or communicated to any other party without the written consent of UBRacing.

COMPONENT MASS (kg)	0.096	MATERIAL SPEC	SEE NOTES
		HEAT TREATMENT	N/A
DRAWN BY	CRH	SURFACE TREATMENT	N/A
		DESCRIPTION	MODULE BASE
SCALE	1:1	SHEET 1/1	PART NUMBER UBR28_AC_N_202

REV	DESCRIPTION	INIT	DATE
01A	INITIAL RELEASE	CRH	

ITEM	UBR PN	QTY	DESC
1	N/A	AS REQD.	ONYX FR CC
2	UBR28_AC_N_003_01A	4	M5 AEROTIGHT NUT

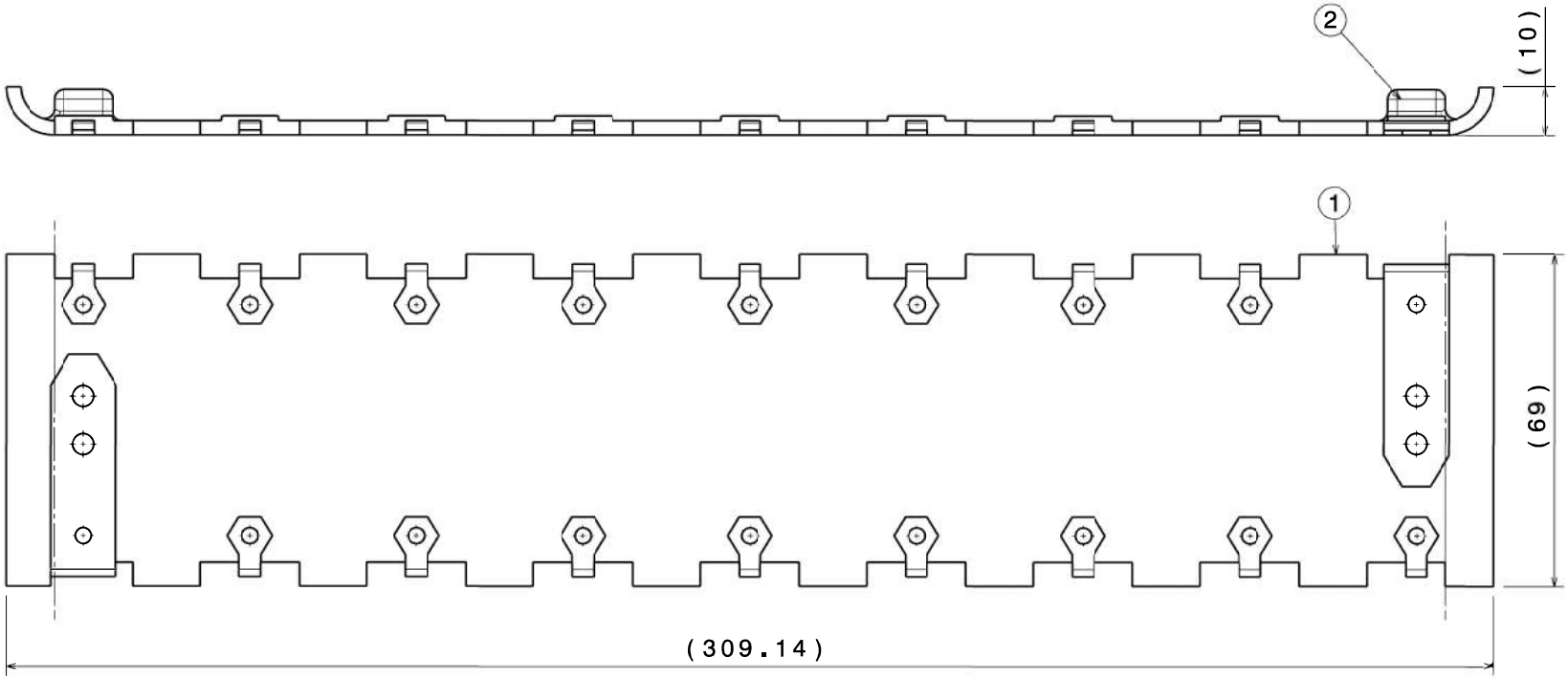

NOTES:
1. PRINT ON MARKFORGED MARK 2
2. MAT'L TO BE ONYX FR CC
3. PROCESS TOLERANCES FROM CAD DATA
4. INSERT ITEM 2 DURING PRINT

UBRacing

A3

IF IN DOUBT - ASK

DO NOT SCALE

TEL. +44 (0)121 414 4218

E-MAIL. ubracing@gmail.com

MATERIAL CERTIFICATE REQUIRED

DIMENSIONS IN MILIMETRES U.O.S

0 DECIMAL PLACES	±0.50
1 DECIMAL PLACE	±0.25
2 DECIMAL PLACES	±0.10
3 DECIMAL PLACES	±0.02
GENERAL CONCENTRICITY	0.1 TIR
ANGULAR TOLERANCE	±0.25°

REMOVE BURRS AND SHARP EDGES

This drawing and the copyright herein are the property of UBRacing. It is private & confidential and is issued on the express condition that it is not modified,copied or communicated to any other party without the written consent of UBRacing.

COMPONENT MASS (kg)	0.064	MATERIAL SPEC	SEE NOTES
		HEAT TREATMENT	N/A
DRAWN BY	CRH	SURFACE TREATMENT	N/A
		DESCRIPTION	MODULE LID
SCALE	1:1	SHEET 1/1	PART NUMBER UBR28_AC_N_20 0

REV	DESCRIPTION	INIT	DATE
01A	INITIAL RELEASE	GA	15/06/2025

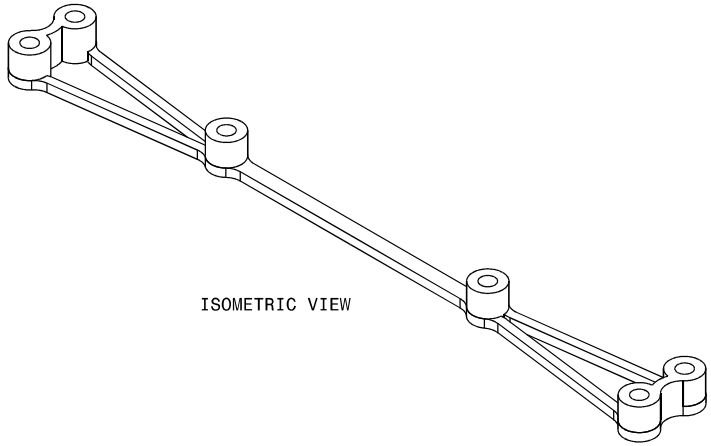

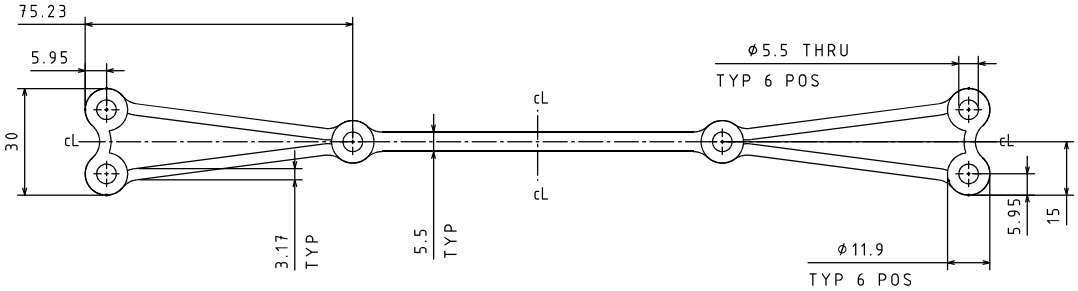

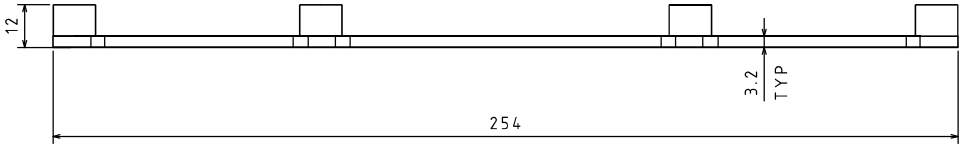

NOTES:

- PART IS SYMMETRICAL ABOUT CENTRELINE

UBRacing	MATERIAL CERTIFICATE REQUIRED DIMENSIONS IN MILIMETRES U.O.S	COMPONENT MASS (kg)	0.015	MATERIAL SPEC	NYLON CF
				HEAT TREATMENT	N/A
A2	IF IN DOUBT - ASK DO NOT SCALE	DRAWN BY	HCF	SURFACE TREATMENT	N/A
				DESCRIPTION	MODULE FEET
TEL.	+44 (0)121 414 4218				
E-MAIL.	ubracing@gmail.com				
	0 DECIMAL PLACES ±0.50 1 DECIMAL PLACE ±0.25 2 DECIMAL PLACES ±0.10 3 DECIMAL PLACES ±0.02 GENERAL CONCENTRICITY 0.1 TIR ANGULAR TOLERANCE ±0.25° REMOVE BURRS AND SHARP EDGES	SCALE	1:1	SHEET 1/1	PART NUMBER UBR28_AC_N_305_01A

This drawing and the copyright herein are the property of UBRacing. It is private & confidential and is issued on the express condition that it is not modified,copied or communicated to any other party without the written consent of UBRacing.

REV	DESCRIPTION	INIT	DATE
01A	INITIAL RELEASE	JDH	16/10/24
02A	ASSEMBLY TOLERANCE ADJUSTED	JDH	17/01/25

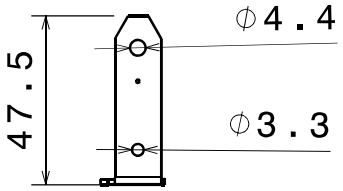

Top view
Scale: 1:2

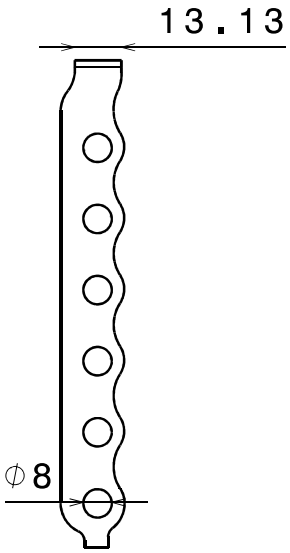

Front view
Scale: 1:2

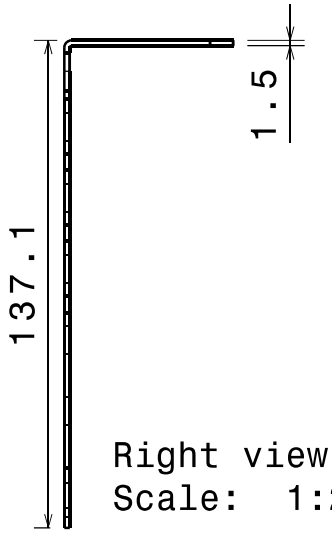

Right view
Scale: 1:2

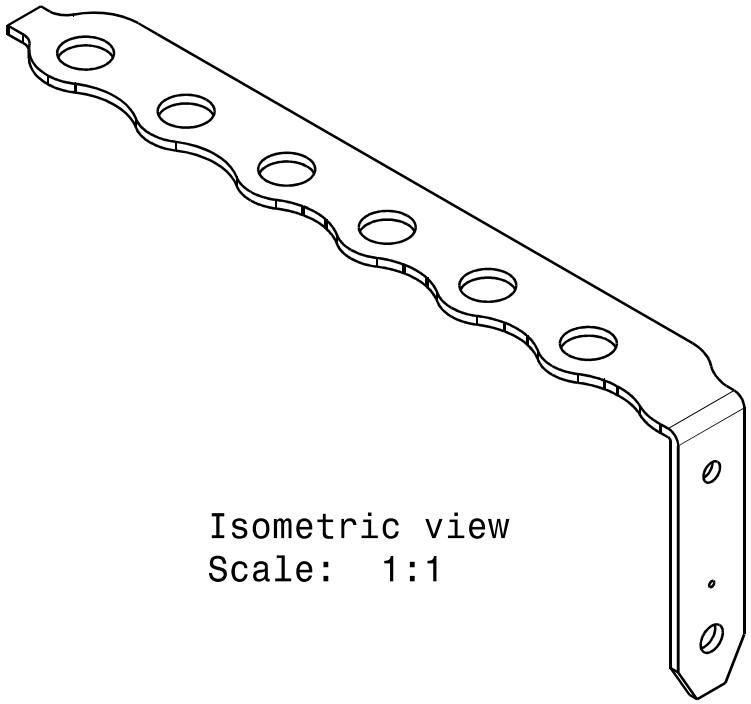

Isometric view
Scale: 1:1

UBRacing	MATERIAL CERTIFICATE REQUIRED DIMENSIONS IN MILIMETRES U.O.S	COMPONENT MASS (kg)	-	MATERIAL SPEC	1.5 mm ALUMINIUM 5083
				HEAT TREATMENT	N/A
A4	IF IN DOUBT - ASK DO NOT SCALE	DRAWN BY	JDH	SURFACE TREATMENT	N/A
	0 DECIMAL PLACES ±0.50 1 DECIMAL PLACE ±0.25 2 DECIMAL PLACES ±0.10 3 DECIMAL PLACES ±0.02 GENERAL CONCENTRICITY 0.1 TIR ANGULAR TOLERANCE ±0.25°			DESCRIPTION	MODULE MAIN BUSBAR
TEL.	+44 (0)121 414 4218				
E-MAIL.	ubracing@gmail.com				
	REMOVE BURRS AND SHARP EDGES				
		SCALE	1:1	SHEET 1/1	PART NUMBER UBR28_AC_N_501_02A

This drawing and the copyright herein are the property of UBRacing. It is private & confidential and is issued on the express condition that it is not modified, copied or communicated to any other party without the written consent of UBRacing.

REV	DESCRIPTION	INIT	DATE
01A	INITIAL RELEASE	JDH	16/10/24
02A	ASSEMBLY TOLERANCE ADJUSTED	JDH	17/01/25

Top view
Scale: 1:2

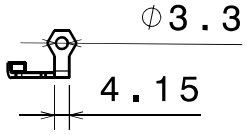

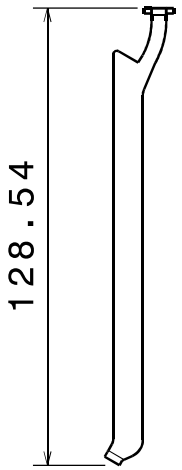

Front view
Scale: 1:2

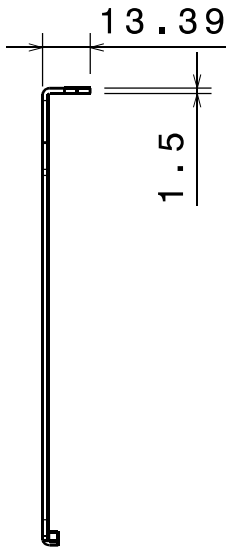

Right view
Scale: 1:2

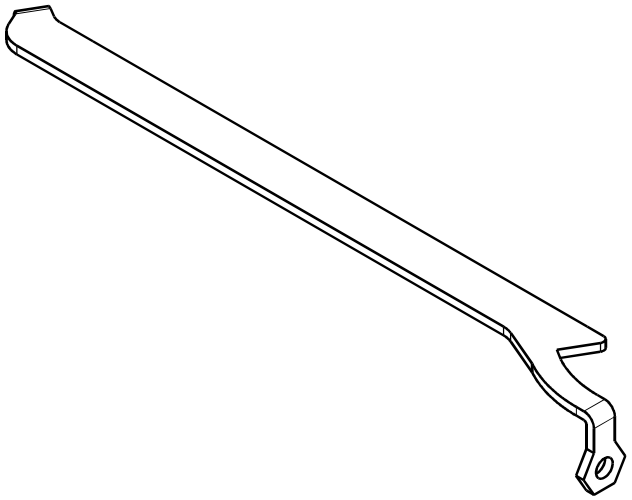

Isometric view
Scale: 1:1

UBRacing	MATERIAL CERTIFICATE REQUIRED DIMENSIONS IN MILIMETRES U.O.S	COMPONENT MASS (kg)	-	MATERIAL SPEC	1.5 mm ALUMINIUM 5083
				HEAT TREATMENT	N/A
A4	IF IN DOUBT - ASK DO NOT SCALE	DRAWN BY	JDH	SURFACE TREATMENT	N/A
	0 DECIMAL PLACES ±0.50 1 DECIMAL PLACE ±0.25 2 DECIMAL PLACES ±0.10 3 DECIMAL PLACES ±0.02 GENERAL CONCENTRICITY 0.1 TIR ANGULAR TOLERANCE ±0.25°			DESCRIPTION	MODULE LINK BUSBAR
TEL.	+44 (0)121 414 4218				
E-MAIL.	ubracing@gmail.com				
	REMOVE BURRS AND SHARP EDGES				
		SCALE	1:1	SHEET 1/1	PART NUMBER UBR28_AC_N_502_02A

This drawing and the copyright herein are the property of UBRacing. It is private & confidential and is issued on the express condition that it is not modified, copied or communicated to any other party without the written consent of UBRacing.

REV	DESCRIPTION	INIT	DATE
01A	INITIAL RELEASE	GA	07/06/2025

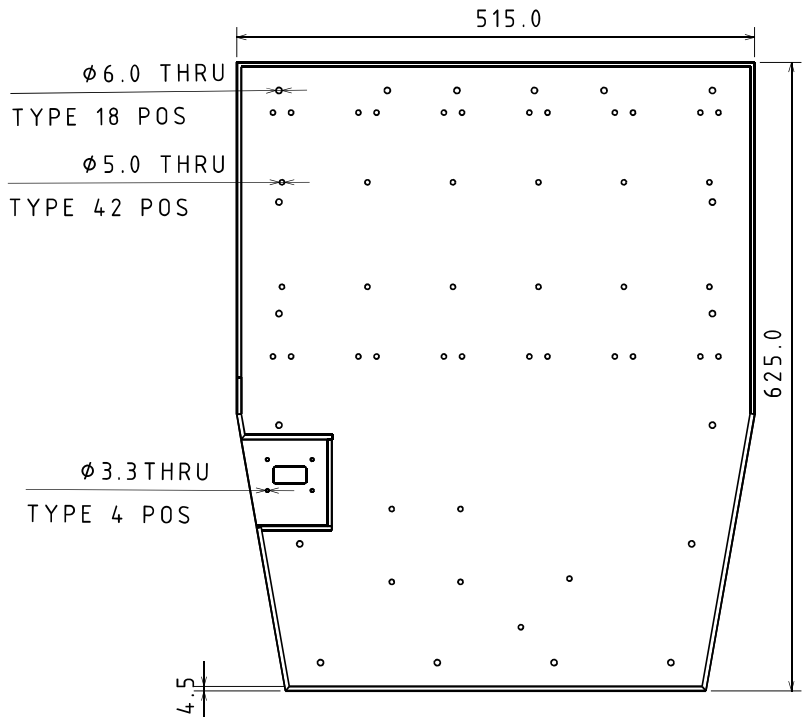

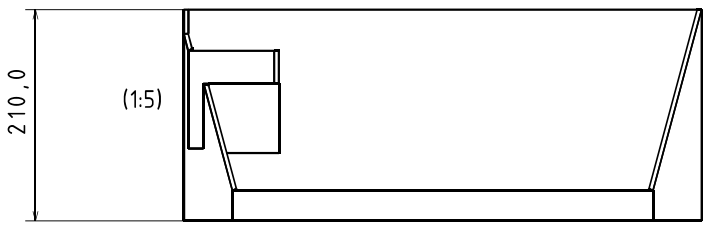

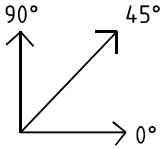

	LAMINATE TABLE		
OP NO.	MATERIAL SPECIFICATION	ORIENTATION	POSITION
1	CHECK ALL TOOLING IS CORRECT AND RELEASED		
2	EPC312FR-A170S-45-1200-NAT	90	1 PLY ALL OVER
3	DEBULK FOR 60 MINS		
4	EPC312FR-A170S-45-1200-NAT	45	1 PLY ON FLOOR
5	EPC312FR-A170S-45-1200-NAT	45	1 PLY ALL OVER
6	DEBULK FOR 60 MINS		
7	EPC312FR-A170S-45-1200-NAT	45	1 PLY ON FLOOR
8	EPC312FR-A170S-45-1200-NAT	90	1 PLY ALL OVER
9	DEBULK FOR 60 MINS		
10	FILM BOND ADHESIVE	-	1 PLY ALL OVER
11	5 MM NOMEX HONEYCOMB CORE	-	FLOOR
12	3 MM NOMEX HONEYCOMB CORE	-	WALLS
13	FIT INSERTS AND LOCATE USING RESIN PINS		
14	FILM BOND ADHESIVE	-	1 PLY ALL OVER
15	EPC312FR-A170S-45-1200-NAT	90	1 PLY ALL OVER
16	DEBULK FOR 60 MINS		
17	EPC312FR-A170S-45-1200-NAT	45	1 PLY ON FLOOR
18	EPC312FR-A170S-45-1200-NAT	45	1 PLY ALL OVER
19	DEBULK FOR 60 MINS		
20	EPC312FR-A170S-45-1200-NAT	45	1 PLY ON FLOOR
21	EPC312FR-A170S-45-1200-NAT	90	1 PLY ALL OVER
22	PEEL PLY	-	-
CURE	VACUUM BAG AND CURE; 30 MINS RAMP UP TO 120C, HOLD FOR 120MINS, RAMP DOWN		

UBRacing

A3

IF IN DOUBT - ASK

DO NOT SCALE

TEL. +44 (0)121 414 4218

E-MAIL. ubracing@gmail.com

MATERIAL CERTIFICATE REQUIRED

DIMENSIONS IN MILIMETRES U.O.S

0 DECIMAL PLACES	±0.50
1 DECIMAL PLACE	±0.25
2 DECIMAL PLACES	±0.10
3 DECIMAL PLACES	±0.02
GENERAL CONCENTRICITY	0.1 TIR
ANGULAR TOLERANCE	±0.25°

REMOVE BURRS AND SHARP EDGES

This drawing and the copyright herein are the property of UBRacing. It is private & confidential and is issued on the express condition that it is not modified,copied or communicated to any other party without the written consent of UBRacing.

COMPONENT MASS (kg)	N/A
DRAWN BY	SK
SCALE	1:5
MATERIAL SPEC	SEE LAMINATE TABLE
HEAT TREATMENT	N/A
SURFACE TREATMENT	N/A
DESCRIPTION	ACCUMULATOR CASING
SHEET	1/1
PART NUMBER	UBR28_AC_N_511_01A

REV	DESCRIPTION	INIT	DATE
01A	INITIAL RELEASE	GA	07/06/2025

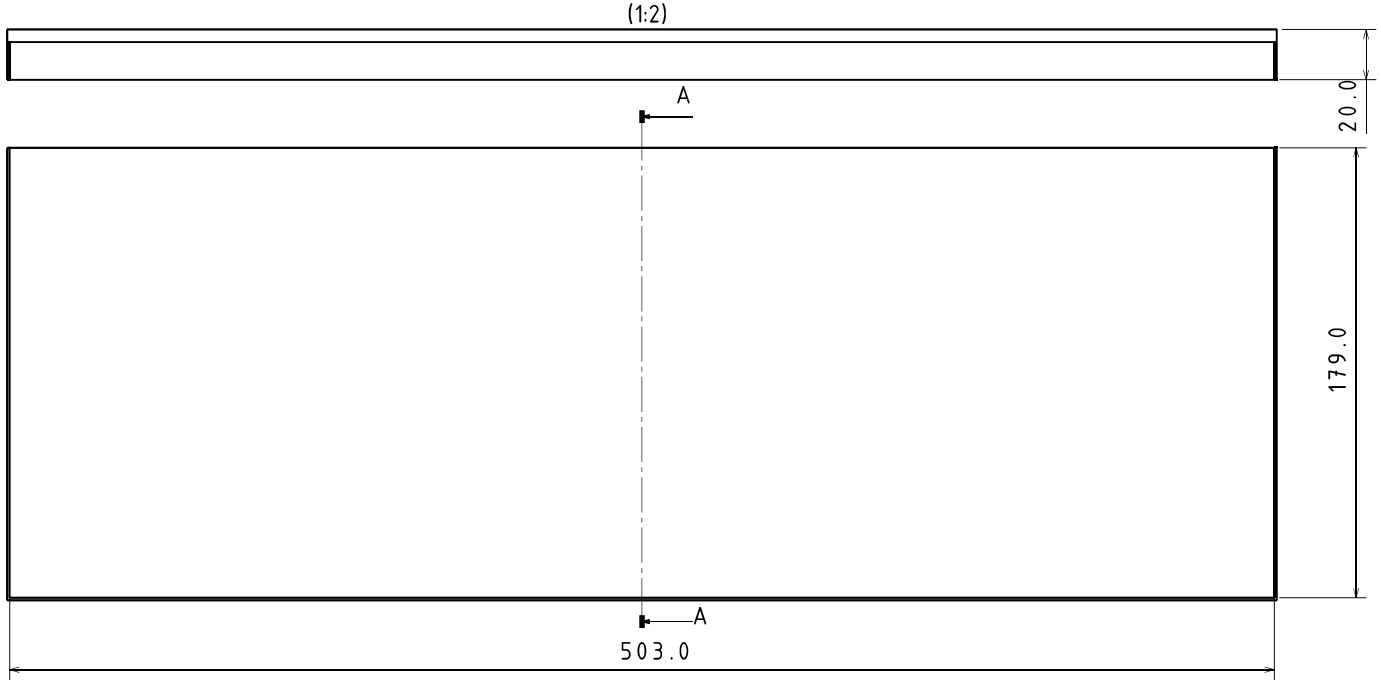

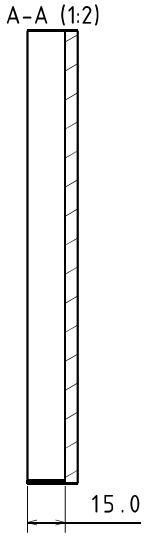

	LAMINATE TABLE		
OP NO.	MATERIAL SPECIFICATION	ORIENTATION	POSITION
1	CHECK ALL TOOLING IS CORRECT AND RELEASED		
2	EPC312FR-A170S-45-1200-NAT	90	1 PLY ALL OVER
3	EPC312FR-A170S-45-1200-NAT	45	1 PLY ALL OVER
4	EPC312FR-A170S-45-1200-NAT	90	1 PLY ALL OVER
5	FILM BOND ADHESIVE	-	1 PLY ALL OVER
6	3 MM NOMEX HONEYCOMB CORE	-	-
7	FILM BOND ADHESIVE	-	1 PLY ALL OVER
8	EPC312FR-A170S-45-1200-NAT	90	1 PLY ALL OVER
9	EPC312FR-A170S-45-1200-NAT	45	1 PLY ALL OVER
10	EPC312FR-A170S-45-1200-NAT	90	1 PLY ALL OVER
11	PEEL PLY	-	-
CURE	VACUUM BAG AND CURE; 30 MINS RAMP UP TO 120C, HOLD FOR 120MINS, RAMP DOWN		

UBRacing

A3

IF IN DOUBT - ASK

DO NOT SCALE

TEL. +44 (0)121 414 4218

E-MAIL. ubracing@gmail.com

MATERIAL CERTIFICATE REQUIRED

DIMENSIONS IN MILIMETRES U.O.S

0 DECIMAL PLACES	±0.50
1 DECIMAL PLACE	±0.25
2 DECIMAL PLACES	±0.10
3 DECIMAL PLACES	±0.02
GENERAL CONCENTRICITY	0.1 TIR
ANGULAR TOLERANCE	±0.25°

REMOVE BURRS AND SHARP EDGES

This drawing and the copyright herein are the property of UBRacing. It is private & confidential and is issued on the express condition that it is not modified,copied or communicated to any other party without the written consent of UBRacing.

COMPONENT MASS (kg): N/A

DRAWN BY: SK

SCALE: 1:2

MATERIAL SPEC: SEE LAMINATE TABLE

HEAT TREATMENT: N/A

SURFACE TREATMENT: N/A

DESCRIPTION: ACCUMULATOR FRONT WALL

SHEET 1/1

PART NUMBER: UBR28_AC_N_512_01A

REV	DESCRIPTION	INIT	DATE
01A	INITIAL RELEASE	GA	07/06/2025

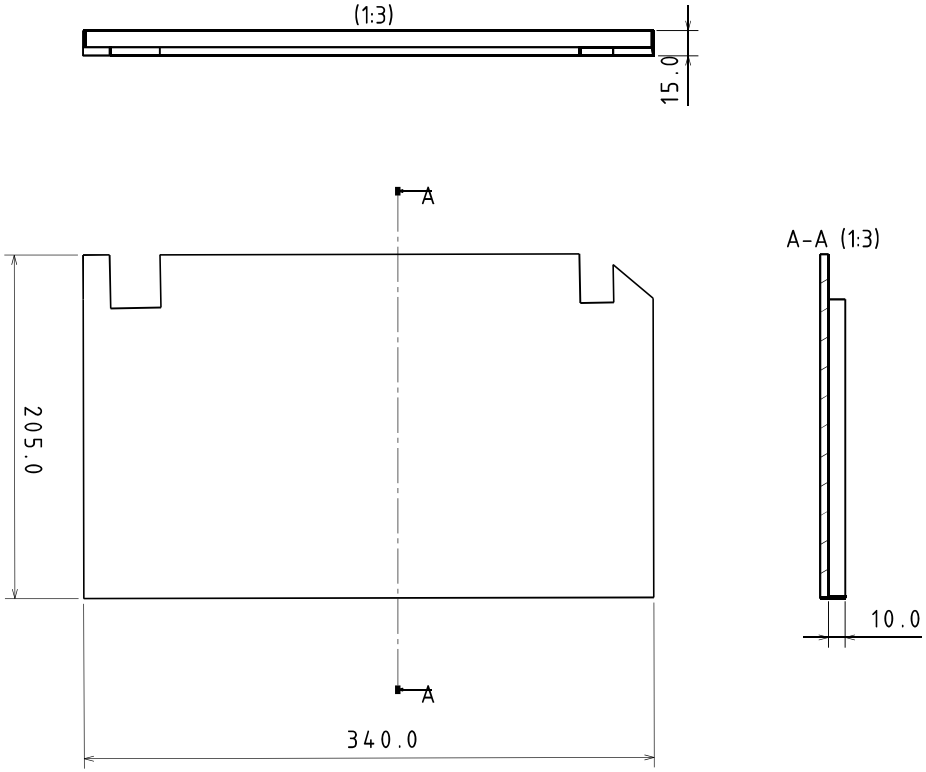

	LAMINATE TABLE		
OP NO.	MATERIAL SPECIFICATION	ORIENTATION	POSITION
1	CHECK ALL TOOLING IS CORRECT AND RELEASED		
2	EPC312FR-A170S-45-1200-NAT	90	1 PLY ALL OVER
3	EPC312FR-A170S-45-1200-NAT	45	1 PLY ALL OVER
4	EPC312FR-A170S-45-1200-NAT	90	1 PLY ALL OVER
5	FILM BOND ADHESIVE	-	1 PLY ALL OVER
6	3 MM NOMEX HONEYCOMB CORE	-	-
7	FILM BOND ADHESIVE	-	1 PLY ALL OVER
8	EPC312FR-A170S-45-1200-NAT	90	1 PLY ALL OVER
9	EPC312FR-A170S-45-1200-NAT	45	1 PLY ALL OVER
10	EPC312FR-A170S-45-1200-NAT	90	1 PLY ALL OVER
11	PEEL PLY	-	-
CURE	VACUUM BAG AND CURE; 30 MINS RAMP UP TO 120C, HOLD FOR 120MINS, RAMP DOWN		

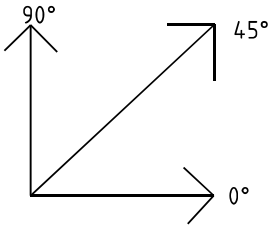

UBRacing

A3

IF IN DOUBT - ASK

DO NOT SCALE

TEL. +44 (0)121 414 4218

E-MAIL. ubracing@gmail.com

MATERIAL CERTIFICATE REQUIRED

DIMENSIONS IN MILIMETRES U.O.S

0 DECIMAL PLACES	±0.50
1 DECIMAL PLACE	±0.25
2 DECIMAL PLACES	±0.10
3 DECIMAL PLACES	±0.02
GENERAL CONCENTRICITY	0.1 TIR
ANGULAR TOLERANCE	±0.25°

REMOVE BURRS AND SHARP EDGES

This drawing and the copyright herein are the property of UBRacing. It is private & confidential and is issued on the express condition that it is not modified,copied or communicated to any other party without the written consent of UBRacing.

COMPONENT MASS (kg)	N/A	MATERIAL SPEC	SEE LAMINATE TABLE
		HEAT TREATMENT	N/A
DRAWN BY	SK	SURFACE TREATMENT	N/A
		DESCRIPTION	ACCUMULATOR DIVIDERS
SCALE	1:3	SHEET 1/1	PART NUMBER UBR28_AC_N_513_01A

REV	DESCRIPTION	INIT	DATE
01A	INITIAL RELEASE	GA	07/06/2025

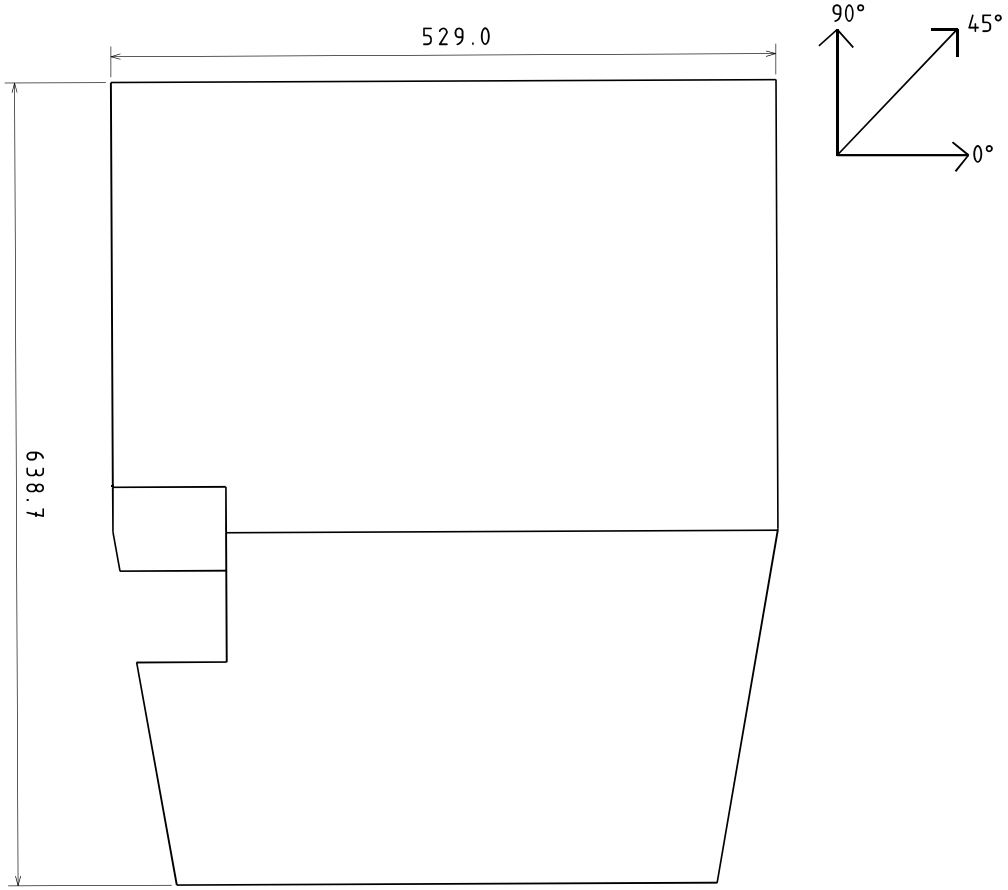

	LAMINATE TABLE		
OP NO.	MATERIAL SPECIFICATION	ORIENTATION	POSITION
1	CHECK ALL TOOLING IS CORRECT AND RELEASED		
2	EPC312FR-A170S-45-1200-NAT	90	1 PLY ALL OVER
3	DEBULK FOR 60 MINS		
4	EPC312FR-A170S-45-1200-NAT	45	1 PLY ALL OVER
6	EPC312FR-A170S-45-1200-NAT	90	1 PLY ALL OVER
7	DEBULK FOR 60 MINS		
8	FILM BOND ADHESIVE	-	1 PLY ALL OVER
9	3 MM NOMEX HONEYCOMB CORE	-	-
10	FILM BOND ADHESIVE	-	1 PLY ALL OVER
11	EPC312FR-A170S-45-1200-NAT	90	1 PLY ALL OVER
12	DEBULK FOR 60 MINS		
13	EPC312FR-A170S-45-1200-NAT	45	1 PLY ALL OVER
14	EPC312FR-A170S-45-1200-NAT	90	1 PLY ALL OVER
15	PEEL PLY	-	-
CURE	VACUUM BAG AND CURE; 30 MINS RAMP UP TO 120C, HOLD FOR 120MINS, RAMP DOWN		

(1:4)

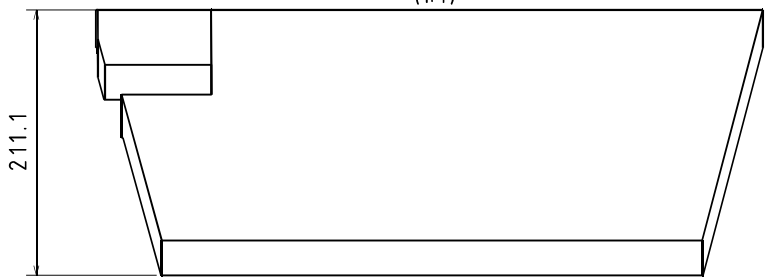

UBRacing

A3

IF IN DOUBT - ASK

DO NOT SCALE

TEL. +44 (0)121 414 4218

E-MAIL. ubracing@gmail.com

MATERIAL CERTIFICATE REQUIRED

DIMENSIONS IN MILIMETRES U.O.S

0 DECIMAL PLACES	±0.50
1 DECIMAL PLACE	±0.25
2 DECIMAL PLACES	±0.10
3 DECIMAL PLACES	±0.02
GENERAL CONCENTRICITY	0.1 TIR
ANGULAR TOLERANCE	±0.25°

REMOVE BURRS AND SHARP EDGES

This drawing and the copyright herein are the property of UBRacing. It is private & confidential and is issued on the express condition that it is not modified,copied or communicated to any other party without the written consent of UBRacing.

COMPONENT MASS (kg)	N/A	MATERIAL SPEC	SEE LAMINATE TABLE
		HEAT TREATMENT	N/A
DRAWN BY	SK	SURFACE TREATMENT	N/A
		DESCRIPTION	ACCUMULATOR CASING LID
SCALE	1:4	SHEET 1/1	PART NUMBER UBR28_AC_N_514_01A

CUSTOMER DRAWING

REVISIONS				
REV	DESCRIPTION	DATE	BY	APPR
A	INITIAL RELEASE	01/04/14	DH	EC
B	CHANGE THE STRUCTURE OF PIN	01/26/14	DH	EC
C	CHANGE THE STRUCTURE OF PIN	02/06/14	DH	EC
D	ADD TORQUE FORCE	03/19/14	DH	EC
E	ADD RadLok Pin 14.0	04/01/15	VF	EC
F	Add a view of 10.0 and 14.0	01/11/18	KW	JG
G	CHANGE THE STRUCTURE OF PIN 14.0	07/09/18	DL	JL

Only For 10.0mm And 14.0mm

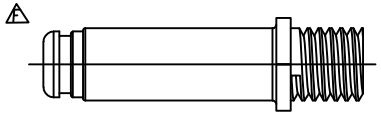

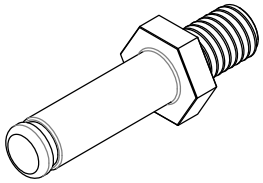

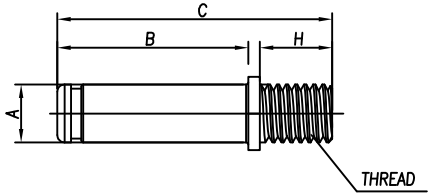

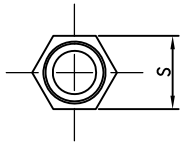

Ordering Example:

RL 9 080 – 101

- RadLok
- RadLok Pin
- RadLok Size: ø8.0mm
- Surface Finish: Silver

Note:
Material: Copper Alloy.

Instruction 1

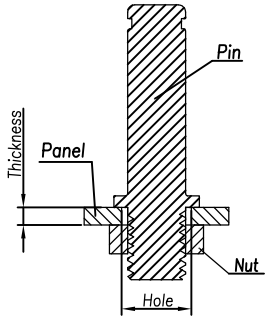

Instruction 2

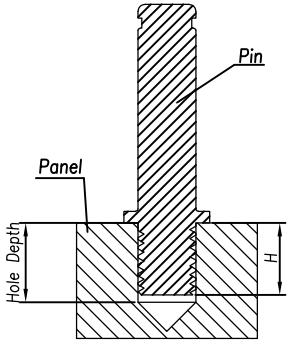

Specification

Pin Size (mm)	A (mm)	B (mm)	C (mm)	H (mm)	S (mm)	Thickness (mm)	Thread	Torque Force (N.m)	Current(A)	Ordering Number (XXX-For Plating)	Plating	
3.6	3.6	17.5	28.0	8	7.0	1.0~2.5	M4 X 0.7 – 6g	2.5±0.2	70	RL9036-XXX	101 102 103	Silver Tin Nickel
5.7	5.7	21.1	34.1	10	10.0	1.0~2.5	M6 X 1.0 – 6g	4.0±0.4	120	RL9057-XXX		
8.0	8.0	26.4	42.4	12	13.0	1.0~3.5	M8 X 1.25 – 6g	7.5±0.5	200	RL9080-XXX		
10.0	10.0	32.2	53.2	16	16.0	1.0~4.0	M10 X 1.5 – 6g	20±1	300	RL9100-XXX		
12.0	12.0	32.6	58.6	20	18.0	1.0~4.5	M12 X 1.75 –6g	24±1	400	RL9120-XXX		
14.0	14.0	41.0	72.0	23	24.0	1.0~4.5	M12 X 1.75 –6g	24±1	500	RL9140-XXX		

AMPHENOL

Amphenol Technical Products International GZ

第三角投影 THIRD ANGLE PROJECTION	页面 SHEET	幅面 SIZE	版次 REV.	比例 SCALE.
	1 OF 2	A3	G	

PART NAME: RadLok Pin

签名 SIGNATURE		日期 DATE
制图 DRAWN	DL	07/09/2018
审核 CHECKED	YM	07/09/2018
批准 APPROVAL	JL	07/09/2018

UNLESS OTHERWISE SPECIFIED
1) All dimensions are in metric(mm).
2) Tolerances are as follows:
0 PL DEC ±1.00
1 PL DEC ±0.50
2 PL DEC ±0.20
Angles ±1°

DWG NO: See Table

CUST PART #: N/A

CUST REV. G

THIS DRAWING IS SUPPLIED FOR INFORMATION ONLY. DESIGN FEATURES, SPECIFICATIONS AND PERFORMANCE DATA SHOWN HEREON ARE THE PROPERTY OF THE AMPHENOL CORPORATION. NO RIGHTS OF REPRODUCTION ARE IMPLIED. ALL DIMENSIONS ARE SUBJECT TO NORMAL MANUFACTURING VARIATIONS.

CUSTOMER DRAWING

REVISIONS					
REV	ECNC#	DESCRIPTION	DATE	BY	APPR
A	--	INITIAL RELEASE	02/24/14	DH	EC
B	--	Add "F" Dimension	03/19/14	DH	EC
C	--	Add RadLok14.0	04/01/15	VF	EC
D	--	Add RL0140-135	06/19/15	JG	EC
E	151203	Correction of Dim	12/15/15	JG	GX
F	170222	Add View X-X	02/22/17	YK	TS
G	--	Add 5.7 series 16mm2.	01/11/18	KW	JG

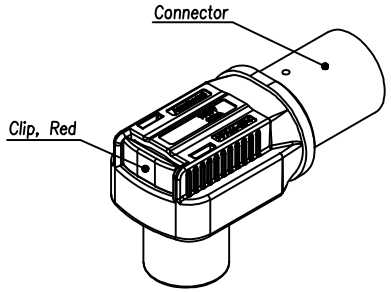

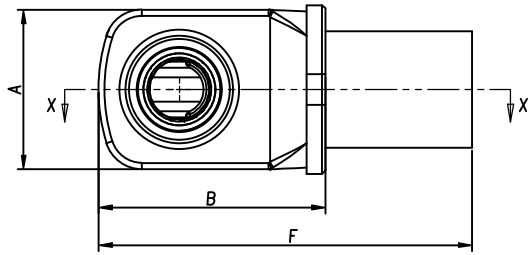

Ordering Example:

RL 0 080 1 - 50

- RadLok
- RadLok Connector Verison
- RadLok Size: ø8.0mm
- Lug Type: Tubular
- Cable Size: 50mm²
- Connector Color: Orange

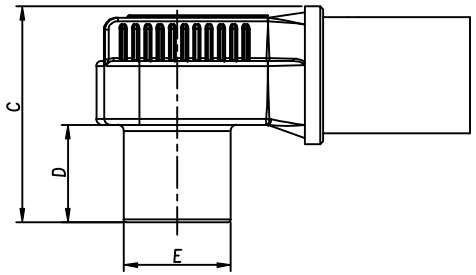

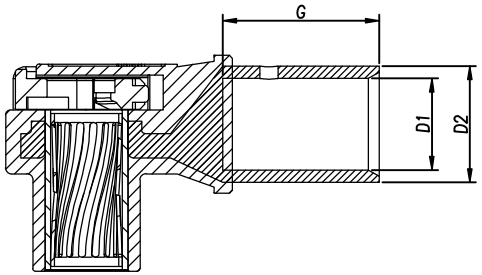

View X-X F

F F F

Specification												
Size (mm)	A (mm)	B (mm)	C (mm)	D (mm)	E (mm)	F (mm)	G (mm)	D1 (mm)	D2 (mm)	Wire Size (mm²)	Current(A)	Ordering Number
3.6	15.5	27.0	18.3	7.3	8.1	38.0	11.0	5.0	6.7	10	70	RL00361-10
5.7	18.5	33.0	23.8	9.4	11.5	47.7	19.0	5.5	8.5	16	90	RL00571-16
						47.7	19.0	7.2	9.5	25	120	RL00571-25
8.0	21.6	39.6	27.7	11.8	14.6	56.0	22.0	9.2	11.5	35	150	RL00801-35
						58.0	24.0	11.0	14.2	50	200	RL00801-50
10.0	26.0	37.0	35.3	15.9	17.5	58.9	22.0	11.0	13.9	50	200	RL01001-50
	31.0					60.9	24.0	12.0	15.5	70	250	RL01001-70
						60.9	25.5	15.0	19.0	95	300	RL01001-95
12.0	33.0	44.5	37.2	15.0	20.0	70.5	28.0	17.0	21.2	120	400	RL01201-120
14.0	42	55	48.5	22.3	23.0	80	28.0	18.2	23.5	135	450	RL01401-135
							28.0	19.0	24.0	150	500	RL01401-150

G

AMPHENOL TPI

Amphenol Technical Products International GZ

第三角投影 THIRD ANGLE PROJECTION	页面 SHEET	幅面 SIZE	版次 REV.	比例 SCALE.
	1 OF 2	A3	G	

PART NAME: RADLOK® Connector Tubular Lug Verison

签名 SIGNATURE		日期 DATE
制图 DRAWN	kelvin	01/11/2018
审核 CHECKED	sam	01/11/2018
批准 APPROVAL	JG	01/11/2018

UNLESS OTHERWISE SPECIFIED
1) All dimensions are in metric(mm).
2) Tolerances are as follows:
0 PL DEC ±1.00
1 PL DEC ±0.50
2 PL DEC ±0.20
Angles ±1°

DWG NO: See Specification

CUST PART #: N/A

CUST REV. G

THIS DRAWING IS SUPPLIED FOR INFORMATION ONLY. DESIGN FEATURES, SPECIFICATIONS AND PERFORMANCE DATA SHOWN HEREON ARE THE PROPERTY OF THE AMPHENOL CORPORATION. NO RIGHTS OF REPRODUCTION ARE IMPLIED. ALL DIMENSIONS ARE SUBJECT TO NORMAL MANUFACTURING VARIATIONS.

REV	DESCRIPTION	INIT	DATE
01A	INITIAL RELEASE	GA	09/11/2024

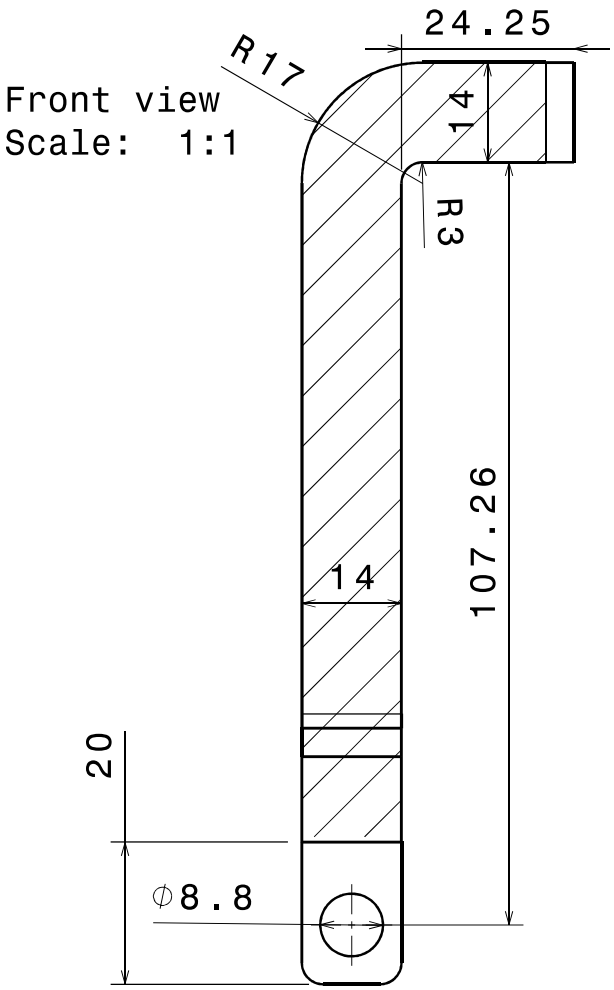

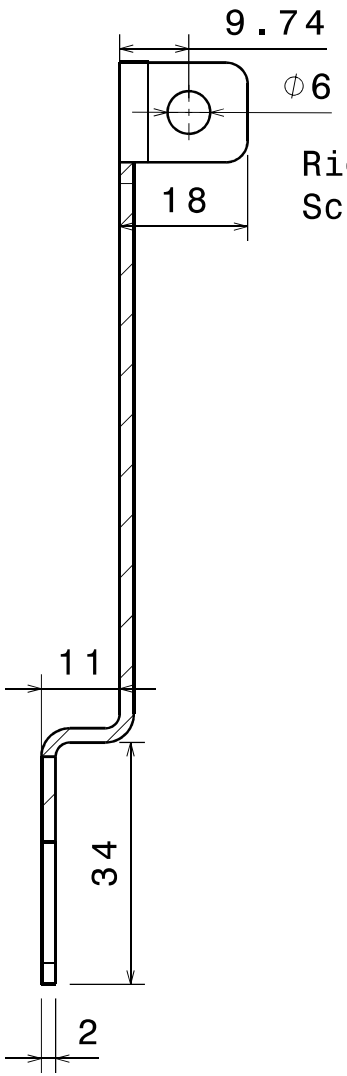

Right view
Scale: 1:1

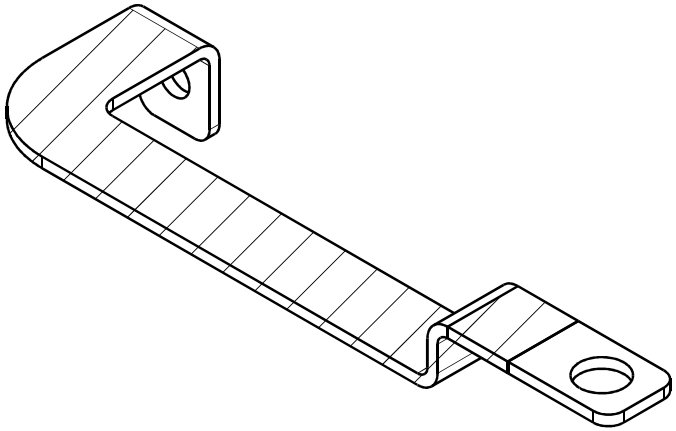

Isometric view
Scale: 1:1

NOTES:
1 - MACHINE TO CAD
2 - SHADED AREA TO BE COATED

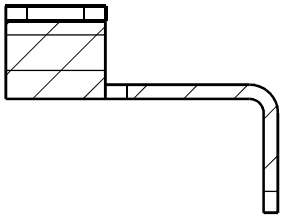

Bottom view
Scale: 1:1

UBRacing	MATERIAL CERTIFICATE REQUIRED DIMENSIONS IN MILIMETRES U.O.S	COMPONENT MASS (kg)	0.012	MATERIAL SPEC	ALUMINIUM
				HEAT TREATMENT	N/A
A4	IF IN DOUBT - ASK DO NOT SCALE	DRAWN BY	JDH	SURFACE TREATMENT	N/A
TEL.	+44 (0)121 414 4218			DESCRIPTION	BAT NEGATIVE BUSBAR
E-MAIL.	ubracing@gmail.com				
	REMOVE BURRS AND SHARP EDGES	SCALE	1:1	SHEET 1/1	PART NUMBER UBR28_AC_N_911_01A

0 DECIMAL PLACES	±0.50
1 DECIMAL PLACE	±0.25
2 DECIMAL PLACES	±0.10
3 DECIMAL PLACES	±0.02
GENERAL CONCENTRICITY	0.1 TIR
ANGULAR TOLERANCE	±0.25°

This drawing and the copyright herein are the property of UBRacing. It is private & confidential and is issued on the express condition that it is not modified, copied or communicated to any other party without the written consent of UBRacing.

REV	DESCRIPTION	INIT	DATE
01A	INITIAL RELEASE	GA	11/09/2024

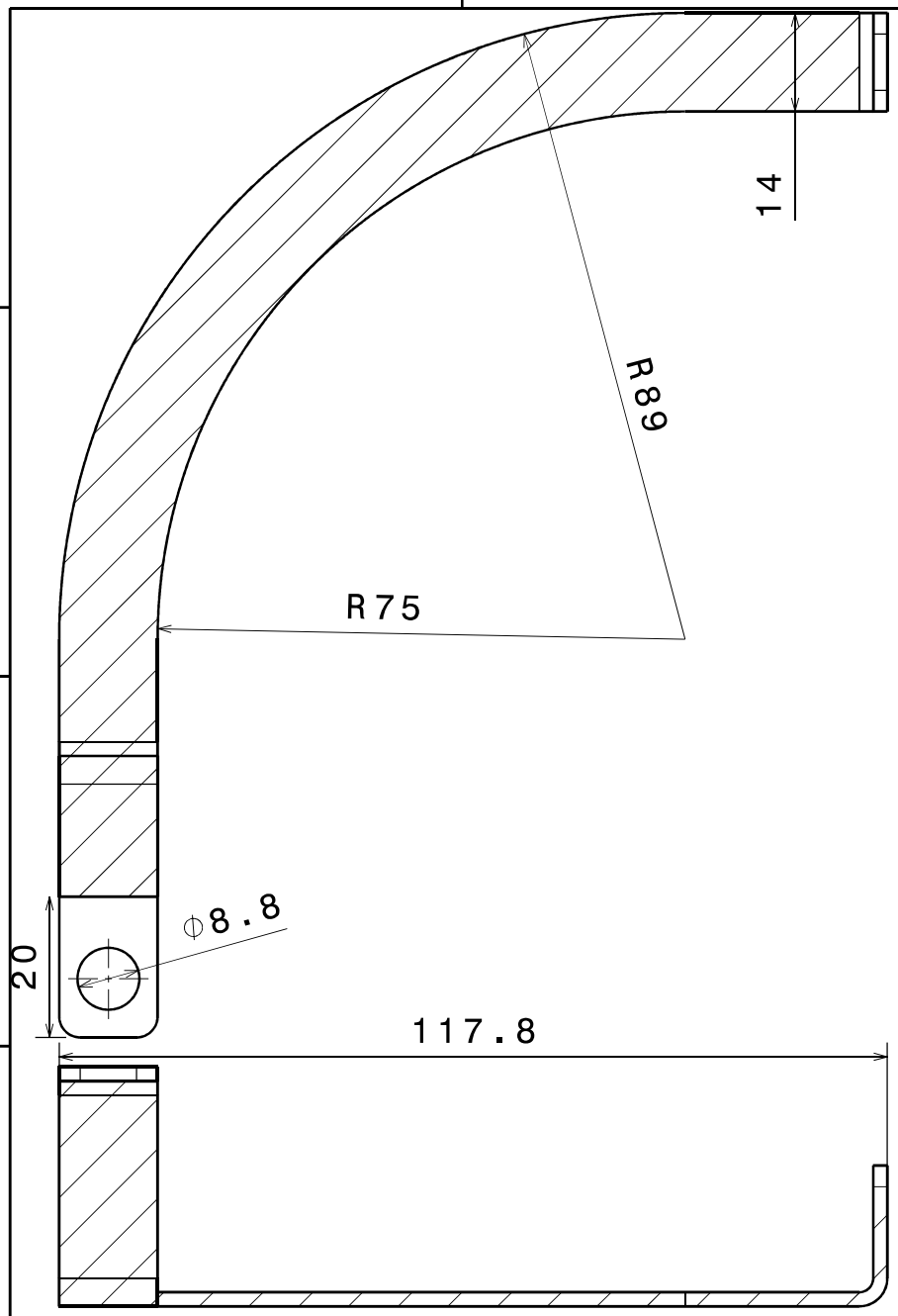

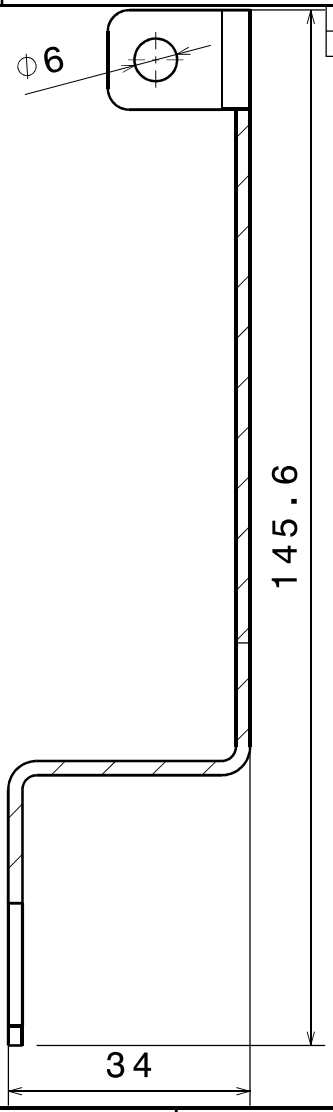

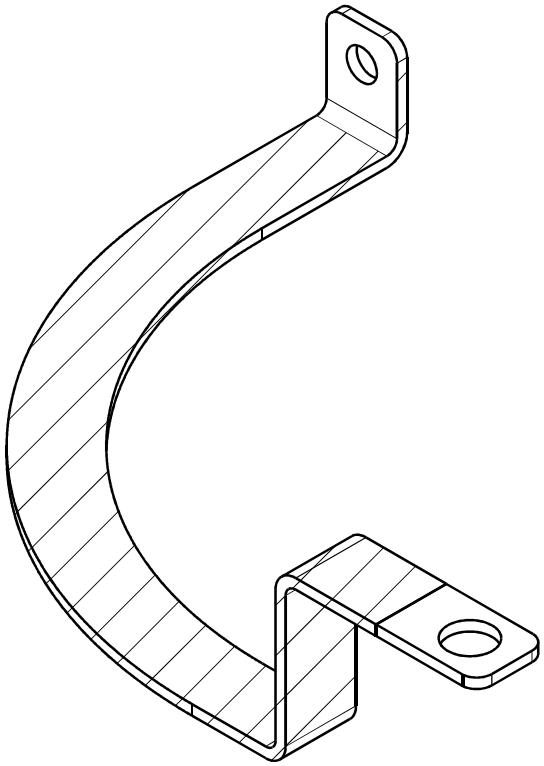

NOTES:
1. MACHINE TO CAD
2. SHADED AREA TO BE COSTED

UBRacing

A4

IF IN DOUBT - ASK

DO NOT SCALE

TEL. +44 (0)121 414 4218

E-MAIL. ubracing@gmail.com

MATERIAL CERTIFICATE REQUIRED

DIMENSIONS IN MILIMETRES U.O.S

0 DECIMAL PLACES	±0.50
1 DECIMAL PLACE	±0.25
2 DECIMAL PLACES	±0.10
3 DECIMAL PLACES	±0.02
GENERAL CONCENTRICITY	0.1 TIR
ANGULAR TOLERANCE	±0.25°

REMOVE BURRS AND SHARP EDGES

This drawing and the copyright herein are the property of UBRacing. It is private & confidential and is issued on the express condition that it is not modified, copied or communicated to any other party without the written consent of UBRacing.

COMPONENT MASS (kg)	0.019
DRAWN BY	GA
SCALE	1:1
MATERIAL SPEC	ALUMINIUM
HEAT TREATMENT	N/A
SURFACE TREATMENT	N/A
DESCRIPTION	NEGATIVE MAIN BUSBAR
SHEET	1/1
PART NUMBER	UBR28_AC_N_912_01A

REV	DESCRIPTION	INIT	DATE
01A	INITIAL RELEASE	GA	20/02/2025

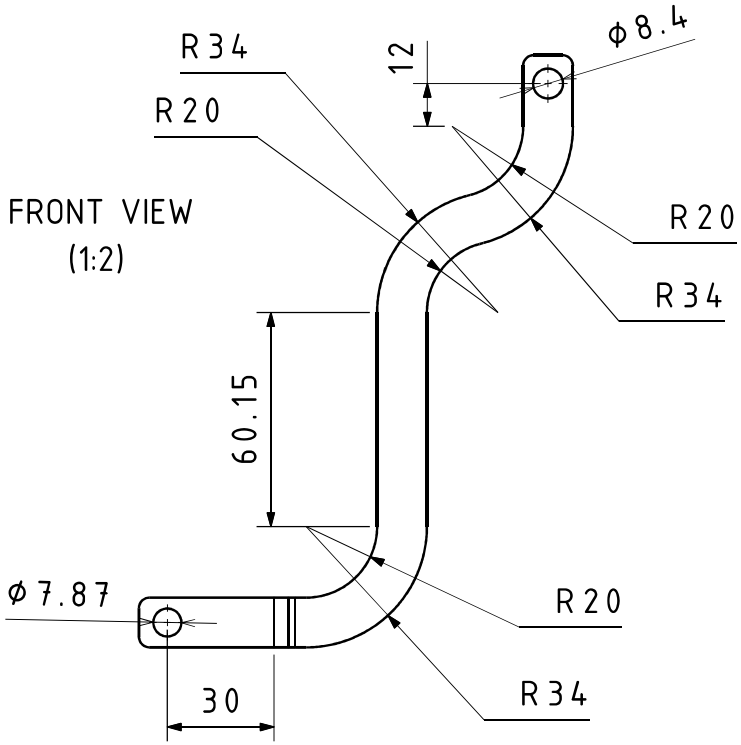

FRONT VIEW
(1:2)

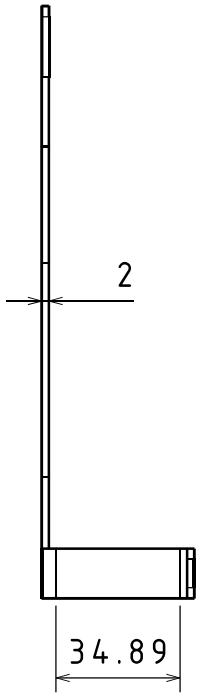

SIDE VIEW
(1:2)

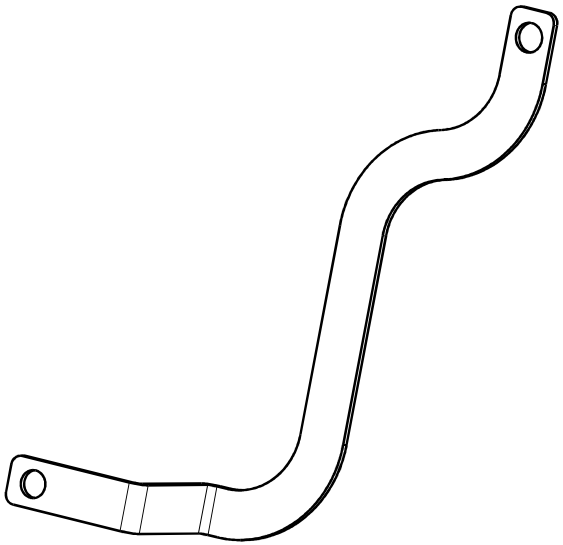

ISOMETRIC VIEW
(1:2)

NOTES:
1 - MACHINE TO CAD
2 - PART TO BE COATED UP TO 10 mm FROM CONTACTOR HOLES EDGE

UBRacing	MATERIAL CERTIFICATE REQUIRED DIMENSIONS IN MILIMETRES U.O.S	COMPONENT MASS (kg)	0.0205	MATERIAL SPEC	ALUMINIUM
				HEAT TREATMENT	N/A
A4	IF IN DOUBT - ASK DO NOT SCALE	DRAWN BY GA		SURFACE TREATMENT	N/A
	0 DECIMAL PLACES ±0.50 1 DECIMAL PLACE ±0.25 2 DECIMAL PLACES ±0.10 3 DECIMAL PLACES ±0.02 GENERAL CONCENTRICITY 0.1 TIR ANGULAR TOLERANCE ±0.25° REMOVE BURRS AND SHARP EDGES			DESCRIPTION	FUSE BUSBAR
TEL.	+44 (0)121 414 4218				
E-MAIL.	ubracing@gmail.com				
This drawing and the copyright herein are the property of UBRacing. It is private & confidential and is issued on the express condition that it is not modified, copied or communicated to any other party without the written consent of UBRacing.		SCALE	1:2	SHEET 1/1	PART NUMBER UBR28_AC_N_913_01A

REV	DESCRIPTION	INIT	DATE
01C	FINAL RELEASE	GA	07/02/2025

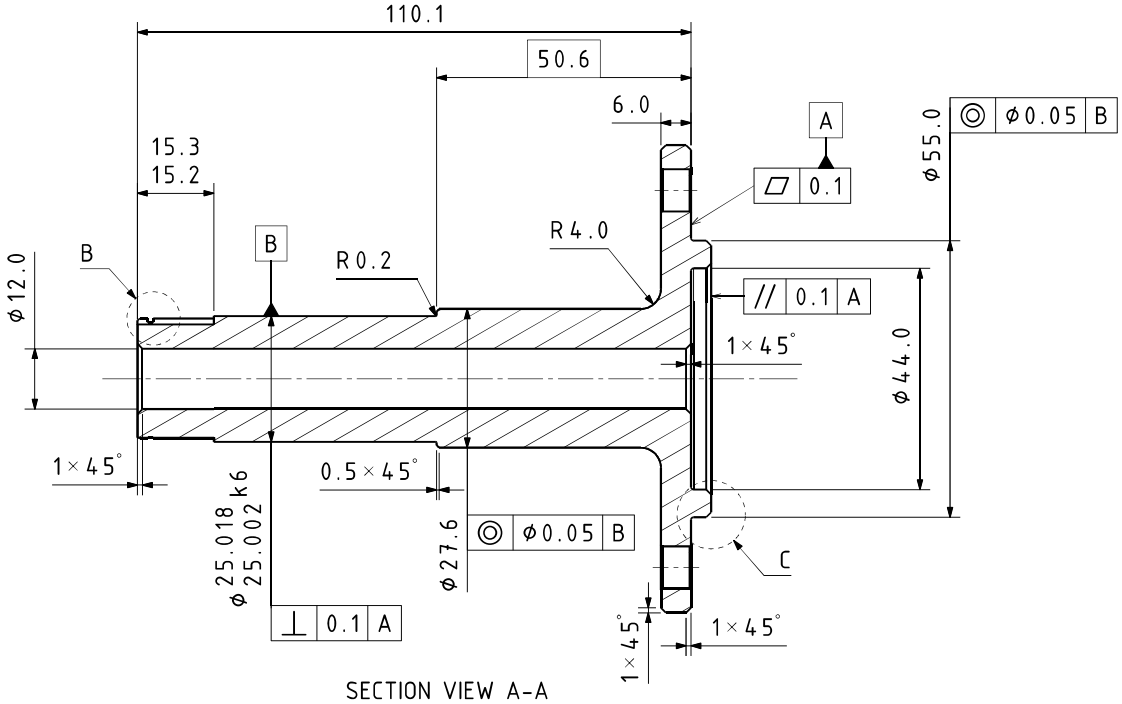

SECTION VIEW A-A

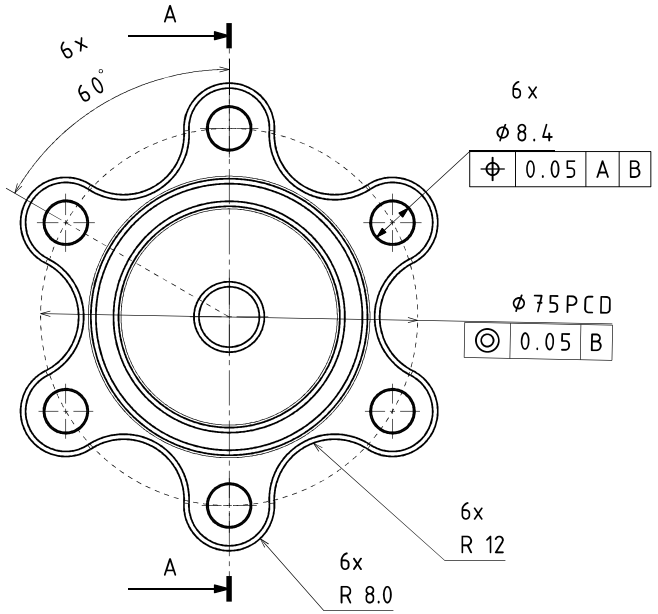

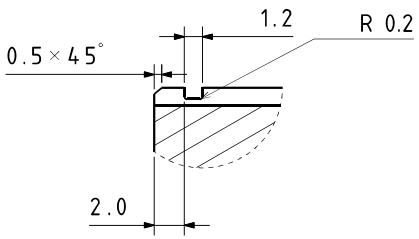

DETAILED VIEW
B (3:1)

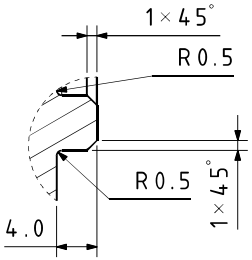

DETAILED VIEW
C (2:1)

EXTERNAL INVOLUTE SPLINE DATA	
REFERENCE DIAMETER	23
MODULE	1.5
PRESSURE ANGLE	30°
NUMBER OF TEETH	13
CLASS OF FIT	6h

NOTES:
1 - CUT SPLINE TO DIN 5480
2 - SPLINE TO BE CUT WITH TOOL PROVIDED; ISC3423795
3 - SPLINE RUNOFF LENGTH AS REQUIRED BY TOOL
4 - REFER TO CAD FOR ANY UNDIMENSIONED FEATURES

UBRacing

A3

IF IN DOUBT - ASK
DO NOT SCALE

TEL. +44 (0)121 414 4218
E-MAIL. ubracing@gmail.com

MATERIAL CERTIFICATE REQUIRED

DIMENSIONS IN MILIMETRES U.O.S

0 DECIMAL PLACES	±0.50
1 DECIMAL PLACE	±0.25
2 DECIMAL PLACES	±0.10
3 DECIMAL PLACES	±0.02
GENERAL CONCENTRICITY	0.1 TIR
ANGULAR TOLERANCE	±0.25°

REMOVE BURRS AND SHARP EDGES

This drawing and the copyright herein are the property of UBRacing. It is private & confidential and is issued on the express condition that it is not modified,copied or communicated to any other party without the written consent of UBRacing.

COMPONENT MASS (kg)	0.557
DRAWN BY	GA
SCALE	1:1
MATERIAL SPEC	AISI 4340
HEAT TREATMENT	NITROTECED
SURFACE TREATMENT	N/A
DESCRIPTION	PROPSHAFT
SHEET	1/1
PART NUMBER	UBR28_PT_N_102_01D

REV	DESCRIPTION	INIT	DATE
01A	INITIAL RELEASE	GA	5/11/24

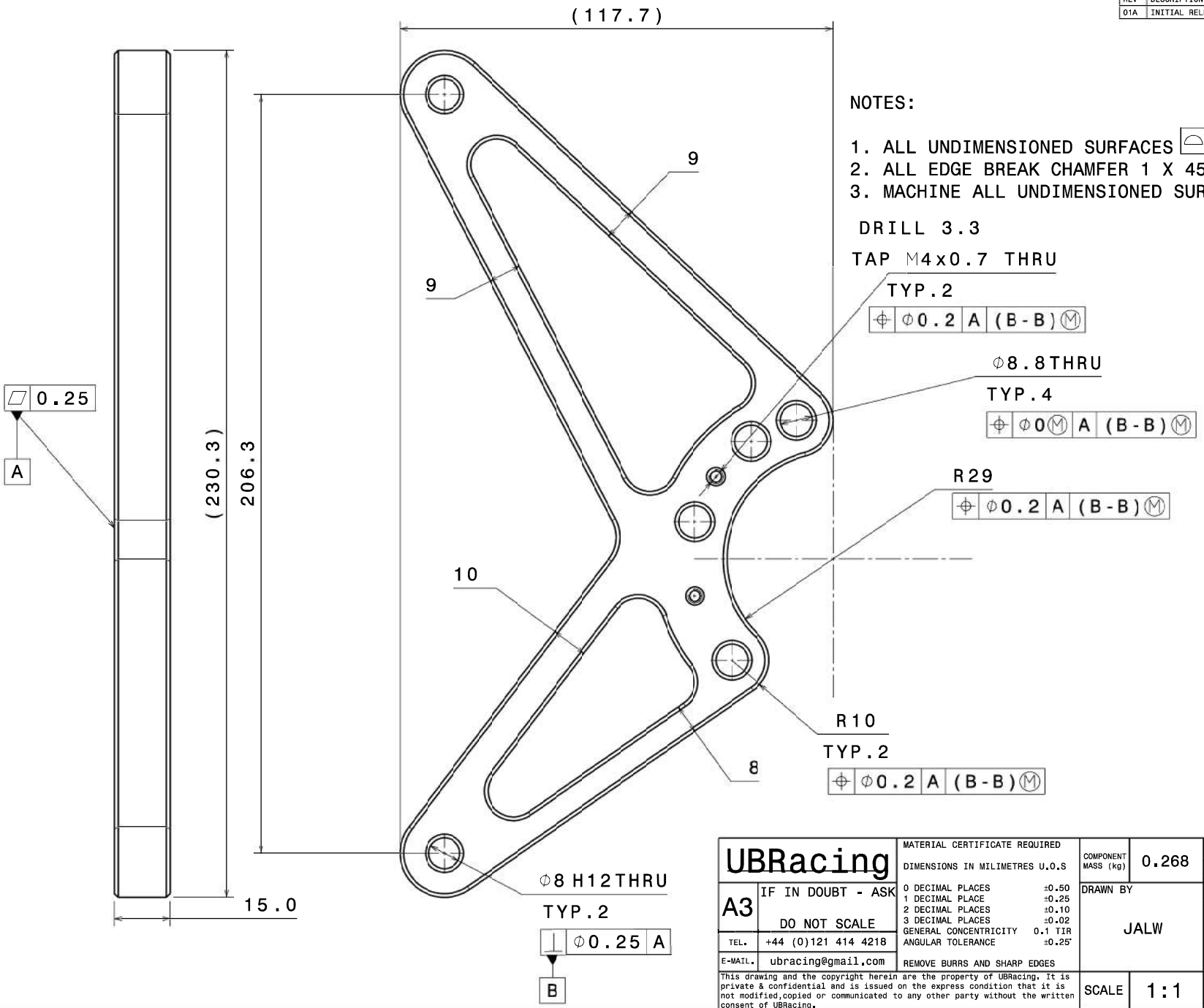

NOTES:

1. ALL UNDIMENSIONED SURFACES ⌓ ⌀0.2 A (B-B) Ⓜ
2. ALL EDGE BREAK CHAMFER 1 X 45°
3. MACHINE ALL UNDIMENSIONED SURFACES TO CAD DATA

DRILL 3.3

UBRacing					
A3	IF IN DOUBT - ASK DO NOT SCALE	MATERIAL CERTIFICATE REQUIRED DIMENSIONS IN MILIMETRES U.O.S 0 DECIMAL PLACES ±0.50 1 DECIMAL PLACE ±0.25 2 DECIMAL PLACES ±0.10 3 DECIMAL PLACES ±0.02 GENERAL CONCENTRICITY 0.1 TIR ANGULAR TOLERANCE ±0.25° REMOVE BURRS AND SHARP EDGES	COMPONENT MASS (kg) 0.268	MATERIAL SPEC	ALUMINIUM 7075-T6
				HEAT TREATMENT	N/A
			DRAWN BY JALW	SURFACE TREATMENT	SULFURIC ACID ANODISED
				DESCRIPTION	MOTOR HANGER
TEL.	+44 (0)121 414 4218				
E-MAIL.	ubracing@gmail.com				
			SCALE 1:1	SHEET 1/1	PART NUMBER UBR28_PT_112_01A

This drawing and the copyright herein are the property of UBRacing. It is private & confidential and is issued on the express condition that it is not modified,copied or communicated to any other party without the written consent of UBRacing.

REV	DESCRIPTION	INIT	DATE
01A	INITIAL RELEASE	JALW	11/11/24

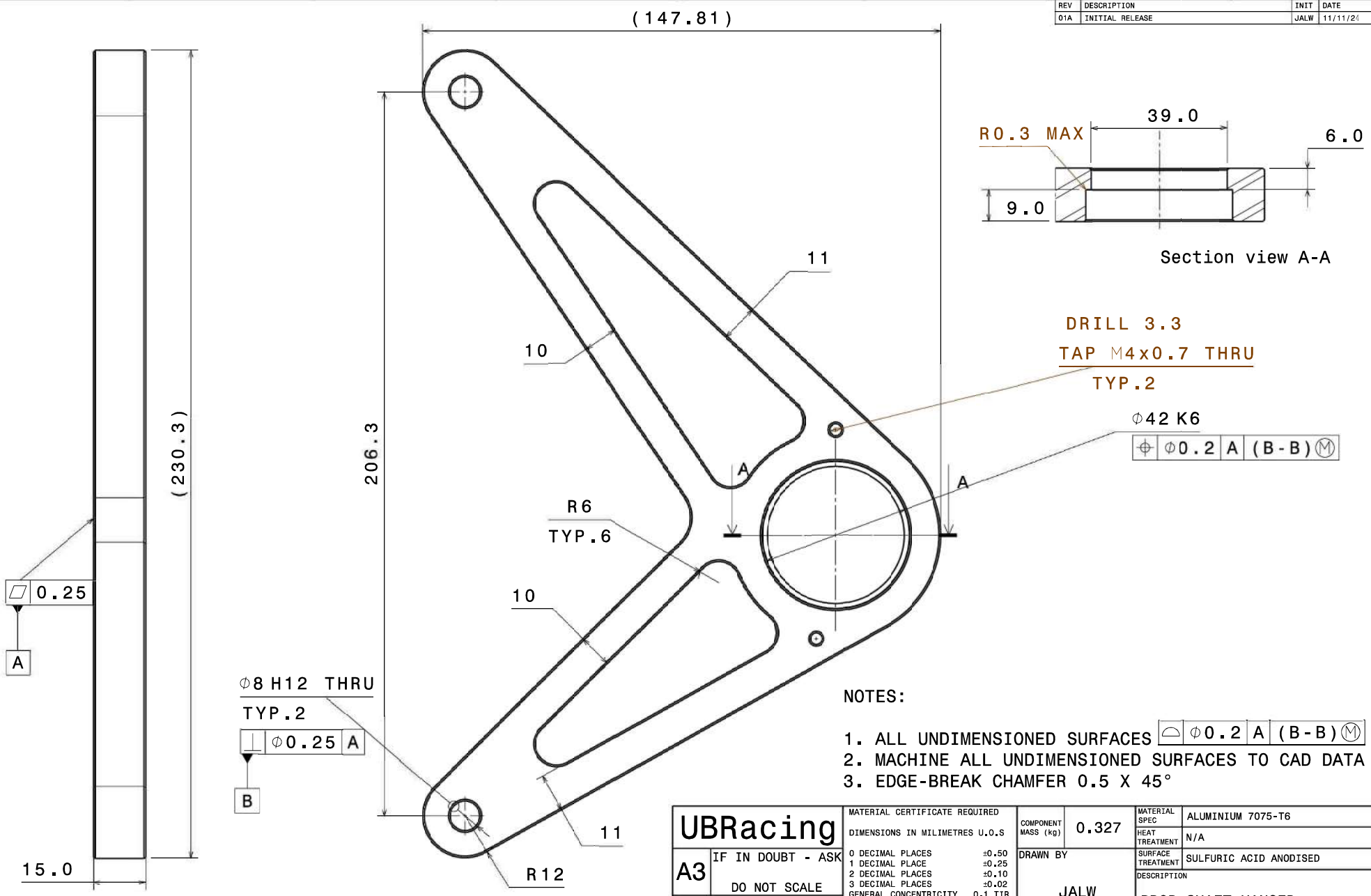

NOTES:

1. ALL UNDIMENSIONED SURFACES Φ0.2 A (B-B) Ⓜ
2. MACHINE ALL UNDIMENSIONED SURFACES TO CAD DATA
3. EDGE-BREAK CHAMFER 0.5 X 45°

UBRacing	MATERIAL CERTIFICATE REQUIRED	COMPONENT MASS (kg) 0.327	MATERIAL SPEC: ALUMINIUM 7075-T6
A3	IF IN DOUBT - ASK		HEAT TREATMENT: N/A
	DO NOT SCALE	DRAWN BY: JALW	SURFACE TREATMENT: SULFURIC ACID ANODISED
TEL. +44 (0)121 414 4218	DIMENSIONS IN MILIMETRES U.O.S		DESCRIPTION: PROP SHAFT HANGER
E-MAIL. ubracing@gmail.com	0 DECIMAL PLACES ±0.50 1 DECIMAL PLACE ±0.25 2 DECIMAL PLACES ±0.10 3 DECIMAL PLACES ±0.02 GENERAL CONCENTRICITY 0.1 TIR ANGULAR TOLERANCE ±0.25°		
	REMOVE BURRS AND SHARP EDGES	SCALE 1:1	SHEET 1/1 · PART NUMBER UBR28_PT_N_122_01A

This drawing and the copyright herein are the property of UBRacing. It is private & confidential and is issued on the express condition that it is not modified,copied or communicated to any other party without the written consent of UBRacing.

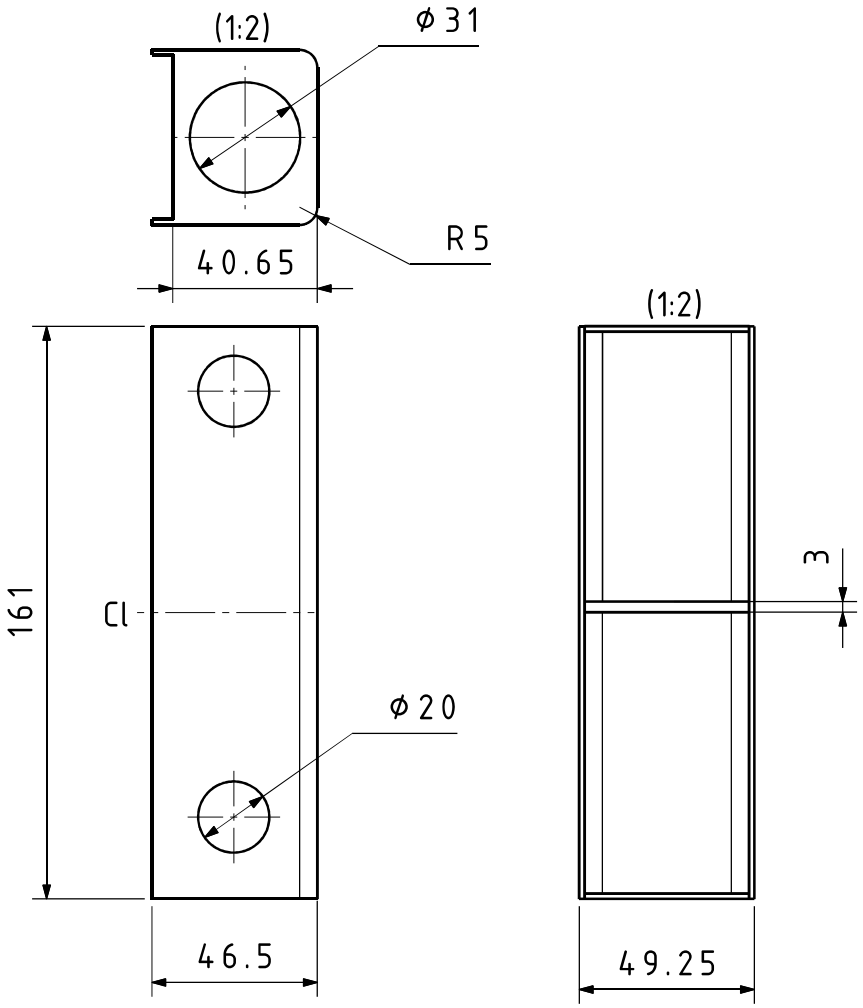

NOTES:

1. SYMMETRICAL ABOUT CENTRELINE (CL)

UBRacing	MATERIAL CERTIFICATE REQUIRED DIMENSIONS IN MILIMETRES U.O.S	COMPONENT MASS (kg)	0.1154	MATERIAL SPEC	ALUMINIUM 5251
				HEAT TREATMENT	N/A
A4	IF IN DOUBT - ASK DO NOT SCALE	DRAWN BY	SCB	SURFACE TREATMENT	N/A
	0 DECIMAL PLACES ±0.50 1 DECIMAL PLACE ±0.25 2 DECIMAL PLACES ±0.10 3 DECIMAL PLACES ±0.02 GENERAL CONCENTRICITY 0.1 TIR ANGULAR TOLERANCE ±0.25°			DESCRIPTION	INLET / OUTLET BOX
TEL.	+44 (0)121 414 4218				
E-MAIL.	ubracing@gmail.com				
	REMOVE BURRS AND SHARP EDGES				
		SCALE	1:2	SHEET 1/1	PART NUMBER UBR28_PT_N_223_01A

This drawing and the copyright herein are the property of UBRacing. It is private & confidential and is issued on the express condition that it is not modified, copied or communicated to any other party without the written consent of UBRacing.

REV	DESCRIPTION	INIT	DATE
01A	INITIAL RELEASE	GA	06/01/25

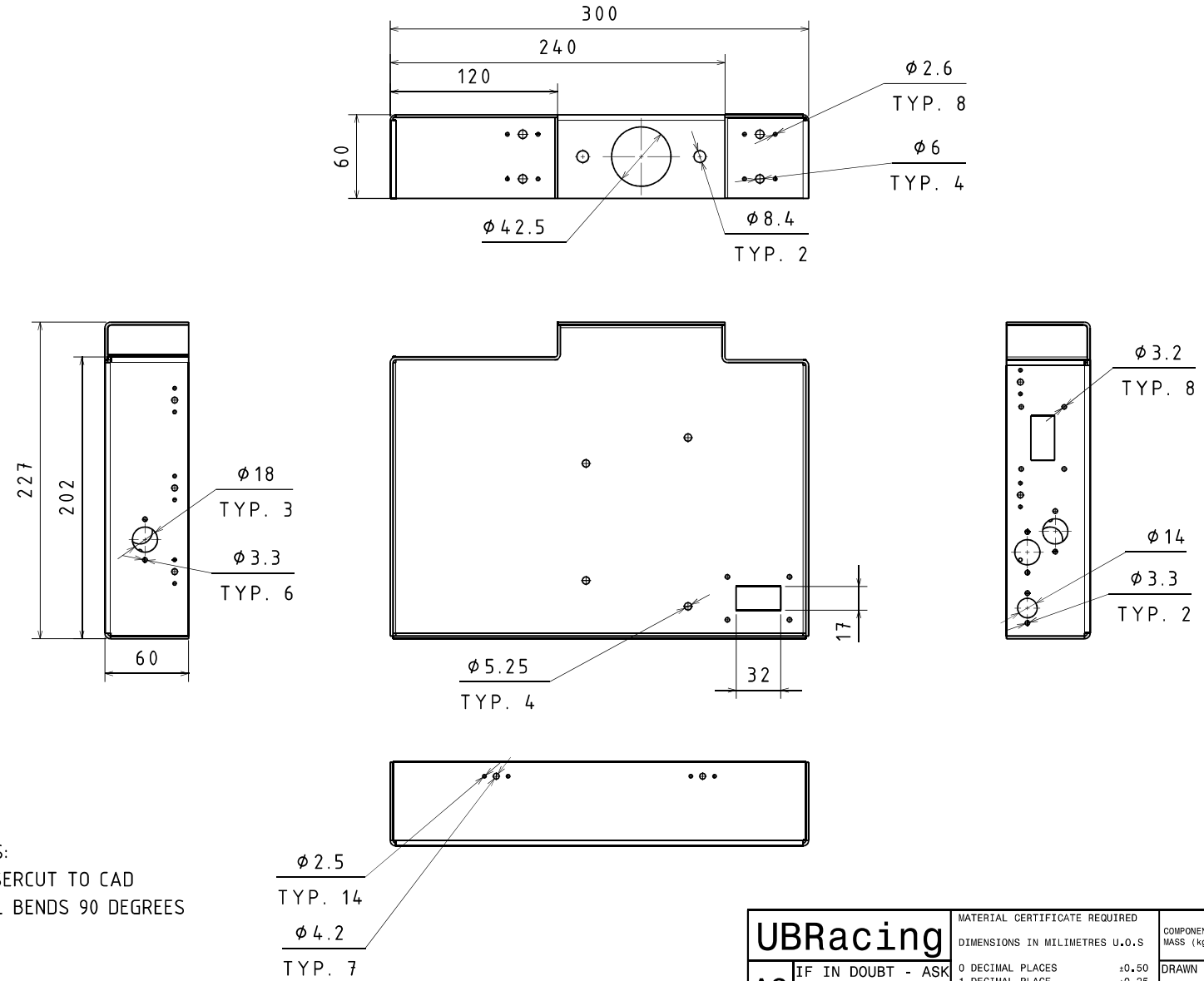

PROPERTY	VALUE
SHEET METAL THICKNESS	2 MM
BEND RADIUS	2 MM

NOTES:
1. LASERCUT TO CAD
2. ALL BENDS 90 DEGREES

UBRacing	MATERIAL CERTIFICATE REQUIRED DIMENSIONS IN MILIMETRES U.O.S	COMPONENT MASS (kg) 0.000	MATERIAL SPEC: ALUMINIUM HEAT TREATMENT: N/A
A3	IF IN DOUBT - ASK DO NOT SCALE	DRAWN BY: KC	SURFACE TREATMENT: N/A DESCRIPTION: HV BOX
TEL.	+44 (0)121 414 4218		
E-MAIL.	ubracing@gmail.com		

0 DECIMAL PLACES ±0.50
1 DECIMAL PLACE ±0.25
2 DECIMAL PLACES ±0.10
3 DECIMAL PLACES ±0.02
GENERAL CONCENTRICITY 0.1 TIR
ANGULAR TOLERANCE ±0.25°
REMOVE BURRS AND SHARP EDGES

This drawing and the copyright herein are the property of UBRacing. It is private & confidential and is issued on the express condition that it is not modified,copied or communicated to any other party without the written consent of UBRacing.

SCALE 1:3 | SHEET 1/1 | PART NUMBER UBR28_PT_N_301_01A

REV	DESCRIPTION	INIT	DATE
01A	INITIAL RELEASE	GA	02/12/2025

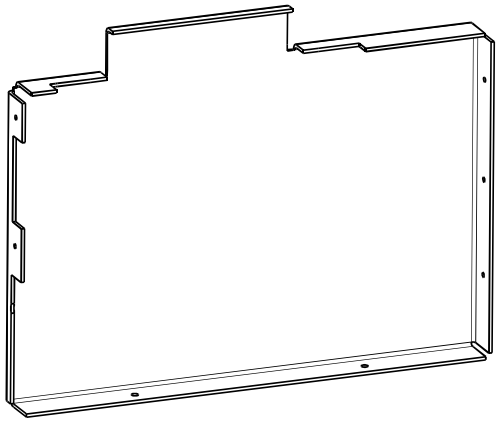

ISOMETRIC VIEW (1:3)

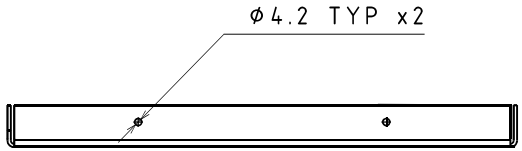

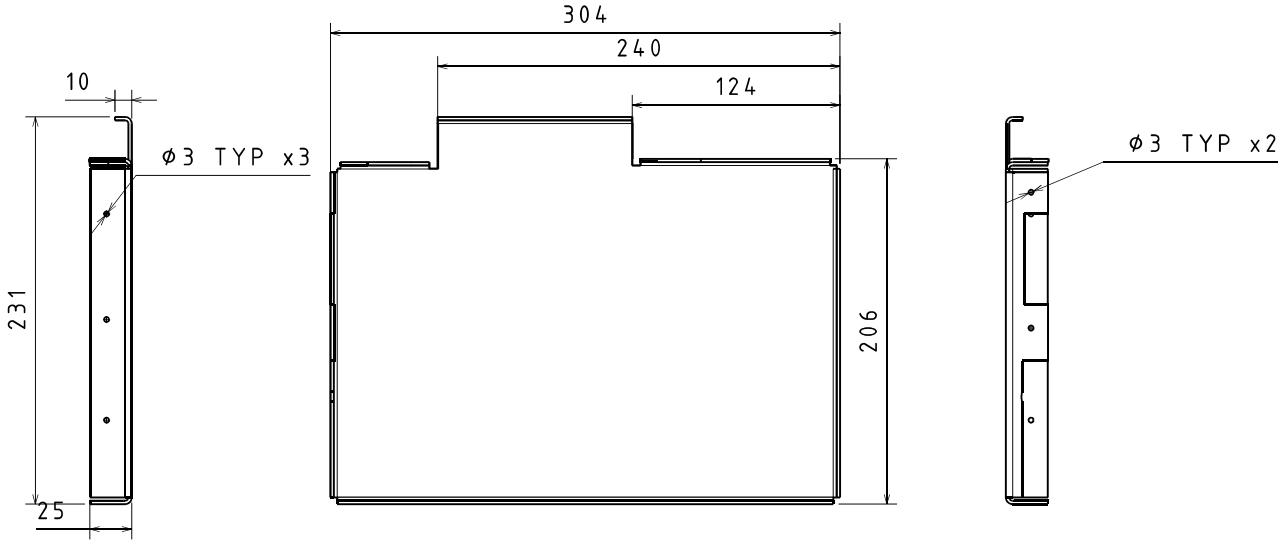

SHEET METAL PARAMETERS

PROPERTY	VALUE
THICKNESS	2 MM
BEND RADIUS	2 MM

NOTES:
1. LAZERCUT TO CAD
2. ALL BENDS TO 90 DEGREES

UBRacing

A3

IF IN DOUBT - ASK

DO NOT SCALE

TEL. +44 (0)121 414 4218

E-MAIL. ubracing@gmail.com

MATERIAL CERTIFICATE REQUIRED

DIMENSIONS IN MILIMETRES U.O.S

0 DECIMAL PLACES	±0.50
1 DECIMAL PLACE	±0.25
2 DECIMAL PLACES	±0.10
3 DECIMAL PLACES	±0.02
GENERAL CONCENTRICITY	0.1 TIR
ANGULAR TOLERANCE	±0.25°

REMOVE BURRS AND SHARP EDGES

This drawing and the copyright herein are the property of UBRacing. It is private & confidential and is issued on the express condition that it is not modified,copied or communicated to any other party without the written consent of UBRacing.

COMPONENT MASS (kg): 0.3337

DRAWN BY: SCB

SCALE: 1:3

MATERIAL SPEC	ALUMINIUM
HEAT TREATMENT	N/A
SURFACE TREATMENT	N/A
DESCRIPTION	HV BOX LID

SHEET 1/1

PART NUMBER: UBR28_PT_N_303_01A

REV	DESCRIPTION	INIT	DATE
01A	INITIAL RELEASE	GA	13/02/2025

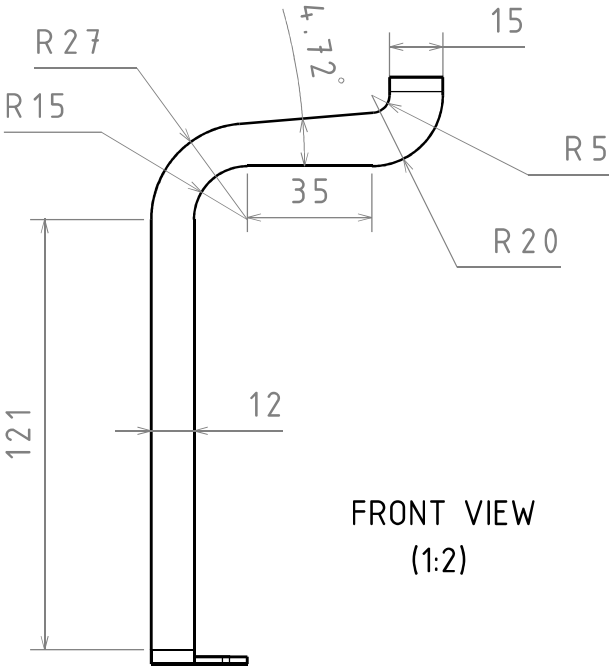

FRONT VIEW
(1:2)

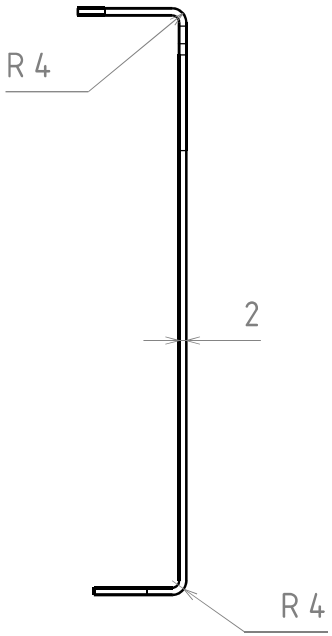

SIDE VIEW
(1:2)

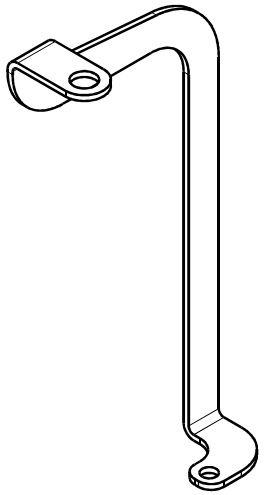

ISOMETRIC VIEW
(2:1)

TOP VIEW
(1:2)

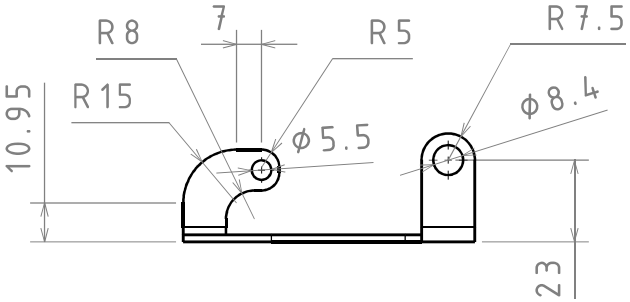

NOTES:

1 - MACHINE TO CAD

2 - PART TO BE COATED UP TO 10 mm FROM CONTACTOR HOLES EDGE

UBRacing	MATERIAL CERTIFICATE REQUIRED DIMENSIONS IN MILIMETRES U.O.S	COMPONENT MASS (kg)	0.0186	MATERIAL SPEC	ALUMINIUM
				HEAT TREATMENT	N/A
A4	IF IN DOUBT - ASK DO NOT SCALE	DRAWN BY GA		SURFACE TREATMENT	N/A
	0 DECIMAL PLACES ±0.50 1 DECIMAL PLACE ±0.25 2 DECIMAL PLACES ±0.10 3 DECIMAL PLACES ±0.02 GENERAL CONCENTRICITY 0.1 TIR ANGULAR TOLERANCE ±0.25° REMOVE BURRS AND SHARP EDGES			DESCRIPTION	HVD POSITIVE BUSBAR
TEL.	+44 (0)121 414 4218				
E-MAIL.	ubracing@gmail.com				
This drawing and the copyright herein are the property of UBRacing. It is private & confidential and is issued on the express condition that it is not modified, copied or communicated to any other party without the written consent of UBRacing.		SCALE	1:1	SHEET 1/1	PART NUMBER UBR28_PT_N_373_01A

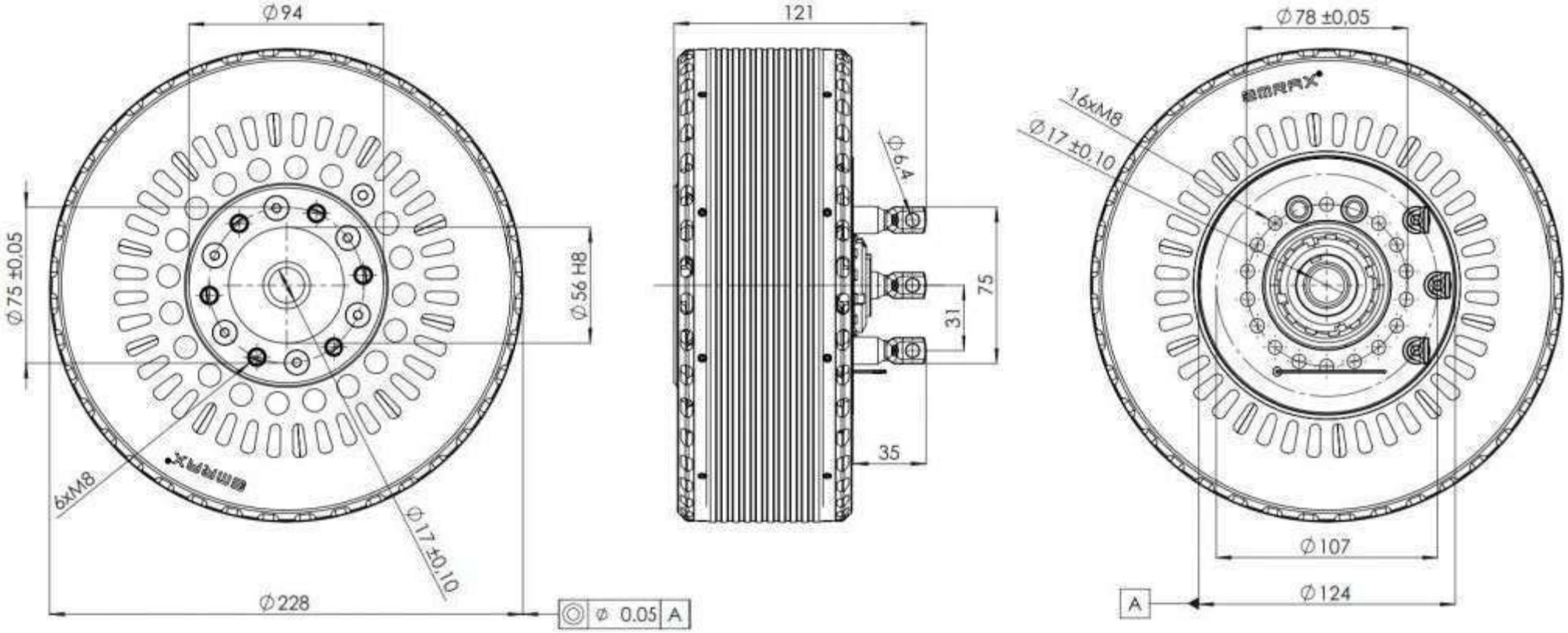
∅94
∅75 ±0,05
∅56 H8
6xM8
∅17 ±0,10
∅228
◎ ∅ 0.05 A
121
∅6,4
75
31
35
∅78 ±0,05
16xM8
∅17 ±0,10
∅107
∅124
A

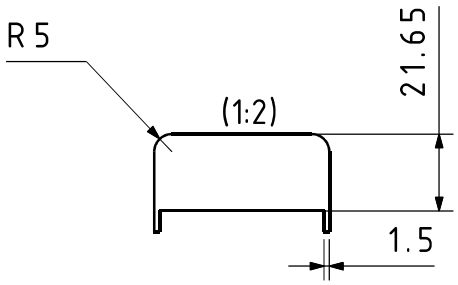

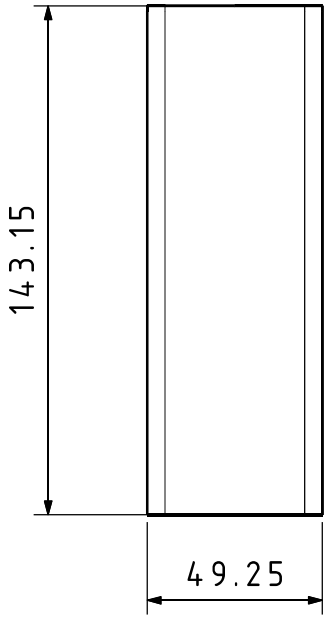

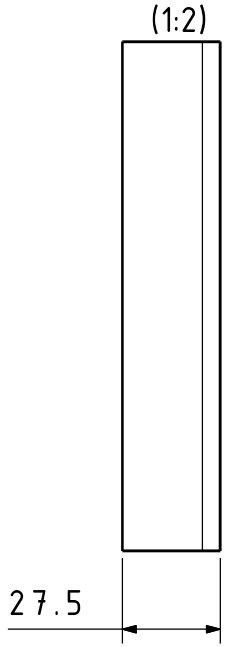

UBRacing	MATERIAL CERTIFICATE REQUIRED DIMENSIONS IN MILIMETRES U.O.S	COMPONENT MASS (kg)	0.0659	MATERIAL SPEC	ALUMINIUM 5251
				HEAT TREATMENT	N/A
A4	IF IN DOUBT - ASK DO NOT SCALE	DRAWN BY	SCB	SURFACE TREATMENT	N/A
	0 DECIMAL PLACES ±0.50 1 DECIMAL PLACE ±0.25 2 DECIMAL PLACES ±0.10 3 DECIMAL PLACES ±0.02 GENERAL CONCENTRICITY 0.1 TIR ANGULAR TOLERANCE ±0.25°			DESCRIPTION	TRANSFER BOX
TEL.	+44 (0)121 414 4218				
E-MAIL.	ubracing@gmail.com				
	REMOVE BURRS AND SHARP EDGES				
	This drawing and the copyright herein are the property of UBRacing. It is private & confidential and is issued on the express condition that it is not modified, copied or communicated to any other party without the written consent of UBRacing.	SCALE	1:2	SHEET 1/1	PART NUMBER UBR28_PT_N_224_01A

ITEM NO.	QTY	PART NO.	DESCRIPTION	MATERIAL
1	1	UBR28_PT_N_112_01A	MOTOR HANGER	ALUMINIUM 7075-T6
2	1	UBR28_PT_N_121_01A	PROP SHAFT	AISI 4130 STEEL
3	4	UBR28_DR_N_311_01A	HANGER CLEVIS	ALUMINIUM 7075-T6
4	1	UBR28_PT_N_111_01A	EMRAX 228 MOTOR	VARIOUS
5	1	UBR28_PT_N_115_01A	MOTOR SCATTER GUARD	ALUMINIUM 1050
6	2	UBR28_PT_N_113_01A	MOTOR HANGER CLEVIS SPACER 2.5	ALUMINIUM 1050
7	2	UBR28_PT_N_114_01A	MOTOR HANGER CLEVIS SPACER 0.5	ALUMINIUM 1050
8	2	UBR28_PT_N_124_01A	PROPSHAFT HANGER CLEVIS SPACER 3	ALUMINIUM 1050
9	4	UBR28_PT_N_116_01A	M8X40 SHANK BOLT	STEEL
10	8	UBR28_PT_N_118_01A	M6 WASHER	STEEL
11	4	UBR28_PT_N_119_01A	M6 NYLOC NUT	STEEL
12	1	UBR28_PT_N_127_01A	25 MM S.D. CIRCLIP	STEEL
13	4	UBR28_PT_N_132_01A	M6 8X30 SHOULDER BOLT	STEEL
14	2	UBR28_PT_N_117_01A	M6X35 BOLT	STEEL
15	2	UBR26_PT_N_922_01A	M6X40 BOLT	STEEL
16	1	UBR28_DR_N_615_01A	INTERNAL CHAIN SCATTER GUARD	MILD STEEL
17	1	UBR28_PT_N_125_01A	PROP SHAFT NSS SPACER	ALUMINIUM 1050
18	1	UBR28_PT_N_126_01A	PROP SHAFT SS SPACER	ALUMINIUM 1050
19	6	UBR28_PT_N_128_01A	M8X25 BOLT	STEEL
20	6	UBR28_PT_N_129_01A	M8 WASHER	STEEL
21	1	UBR28_DR_N_612_01A	TALON SPROCKET (10-TOOTH)	STEEL
22	1	UBR28_PT_N_122_01A	PROP SHAFT HANGER	ALUMINIUM 7075-T6

REV	DESCRIPTION	INIT	DATE
01A	INITIAL RELEASE	GA	07/05/25

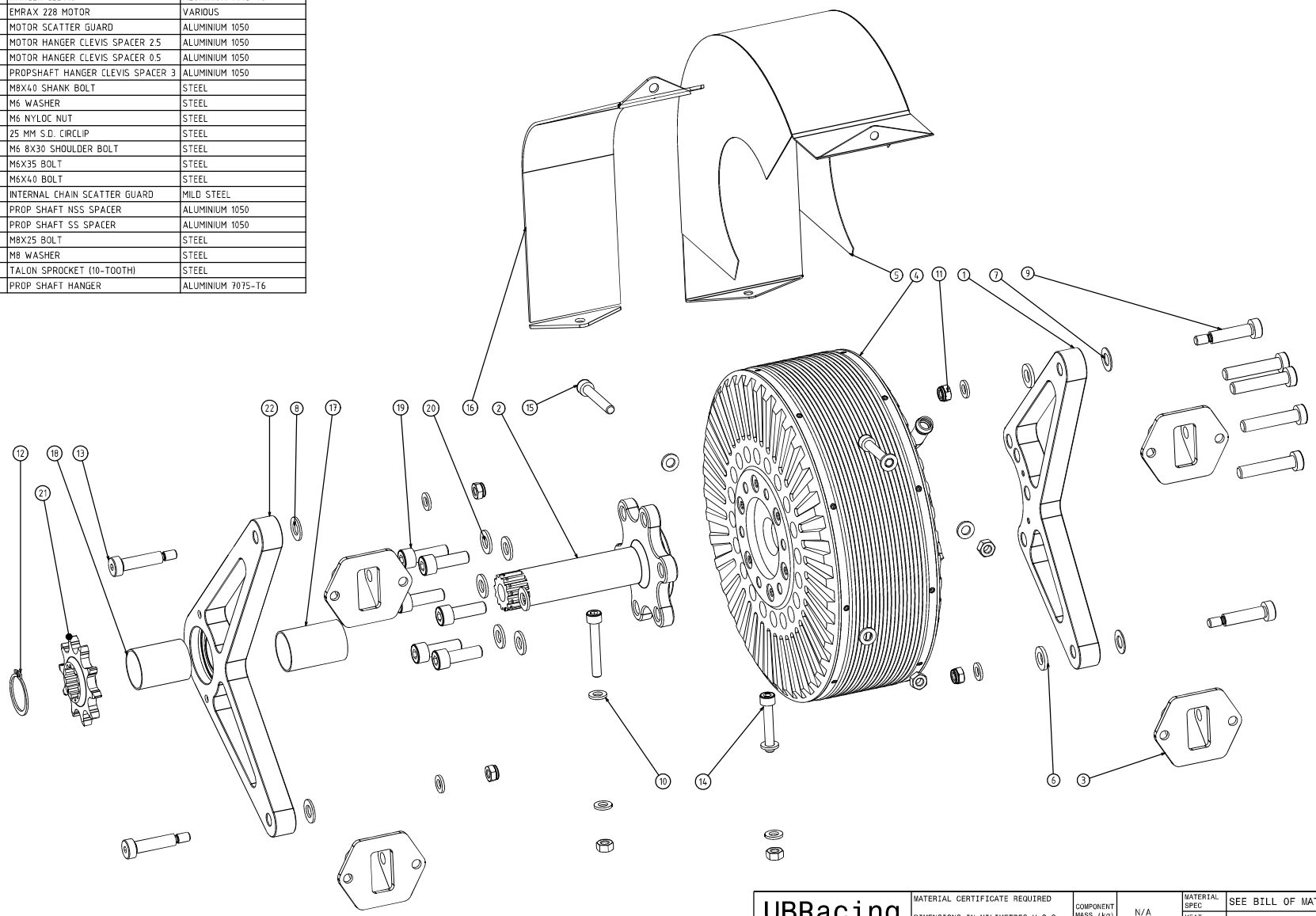

UBRacing

A1

IF IN DOUBT - ASK

DO NOT SCALE

TEL. +44 (0)121 414 4218

E-MAIL. ubracing@gmail.com

MATERIAL CERTIFICATE REQUIRED

DIMENSIONS IN MILIMETRES U.O.S

0 DECIMAL PLACES	±0,50
1 DECIMAL PLACE	±0,25
2 DECIMAL PLACES	±0,10
3 DECIMAL PLACES	±0,02
GENERAL CONCENTRICITY	0.1 TIR
ANGULAR TOLERANCE	±0.25°

REMOVE BURRS AND SHARP EDGES

COMPONENT MASS (kg): N/A

DRAWN BY: GA

MATERIAL SPEC: SEE BILL OF MATERIALS

HEAT TREATMENT: N/A

SURFACE TREATMENT: N/A

DESCRIPTION: MECHANICAL SUB ASSEMBLY

SCALE: 1:1

SHEET: 1/1

PART NUMBER: UBR28_PT_N_100_01A

This drawing and the copyright herein are the property of UBRacing. It is private & confidential and is issued on the express condition that it is not modified, copied or communicated to any other party without the written consent of UBRacing.

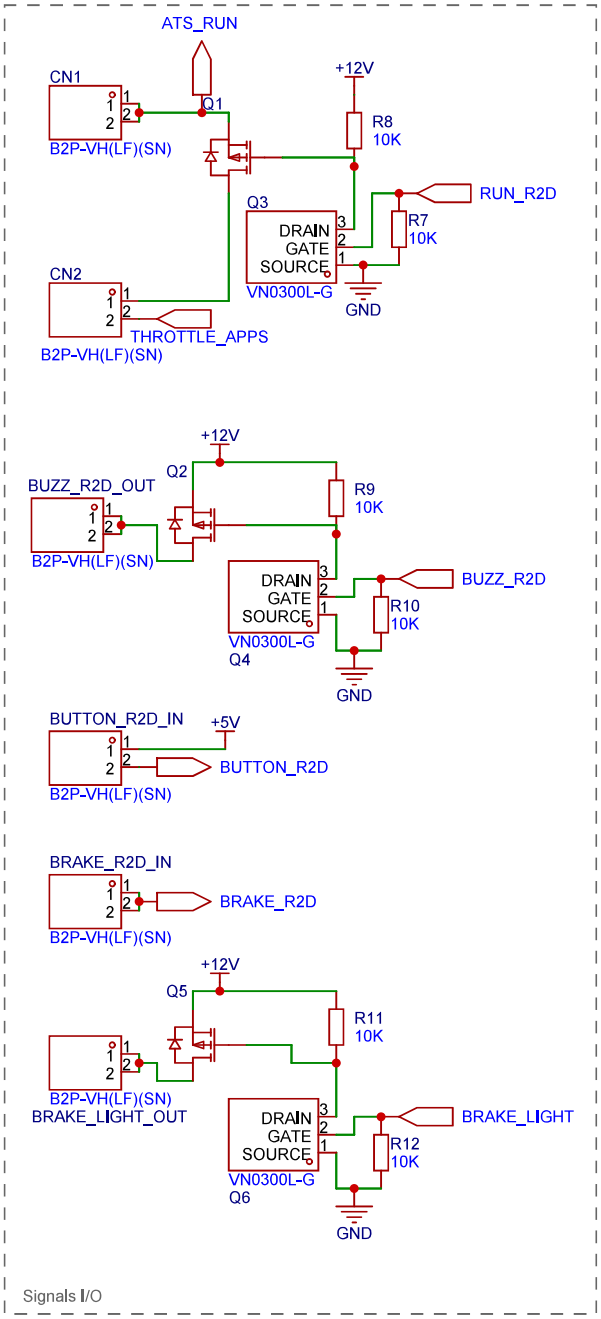

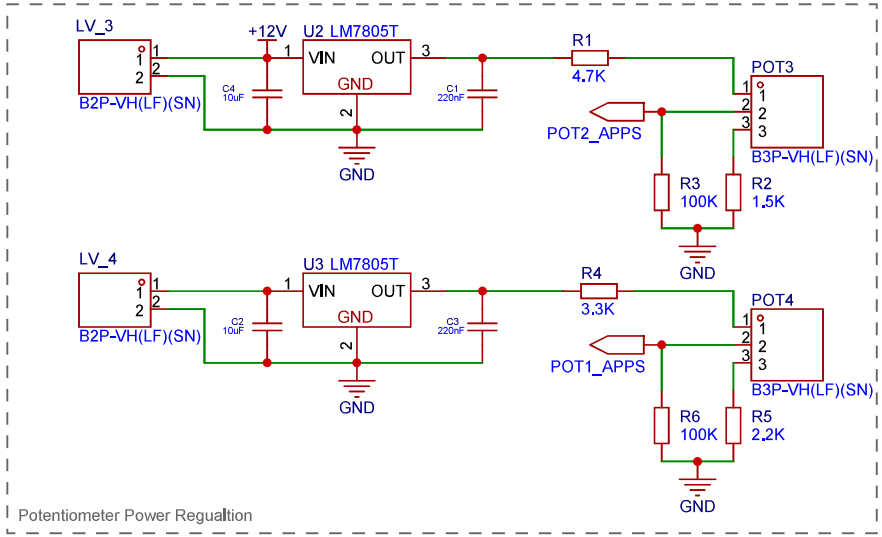

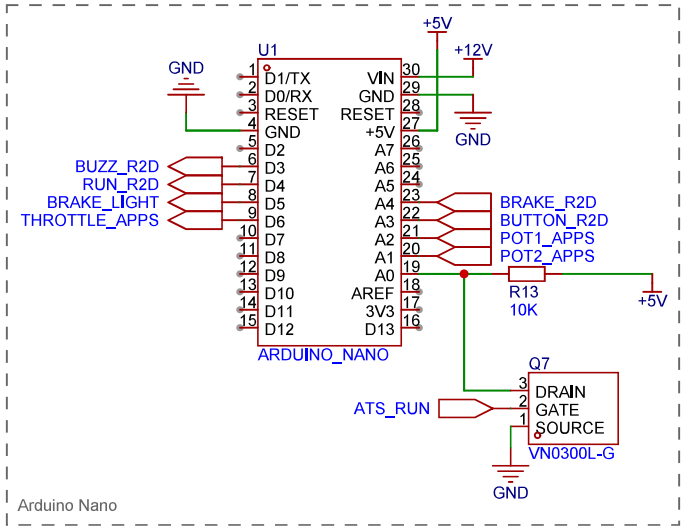

Schematic	APPS, R2D, Brake Light	Create at	2025-04-28
		Update at	2025-06-12
		Page	04A of 1
Drawn	Olek Matuszkiewicz	UBR28_CO_APPS_R2D_BRK_LIGHT_02B	
Reviewed			
		Version	Size	Page 1 Total 1
		03A		

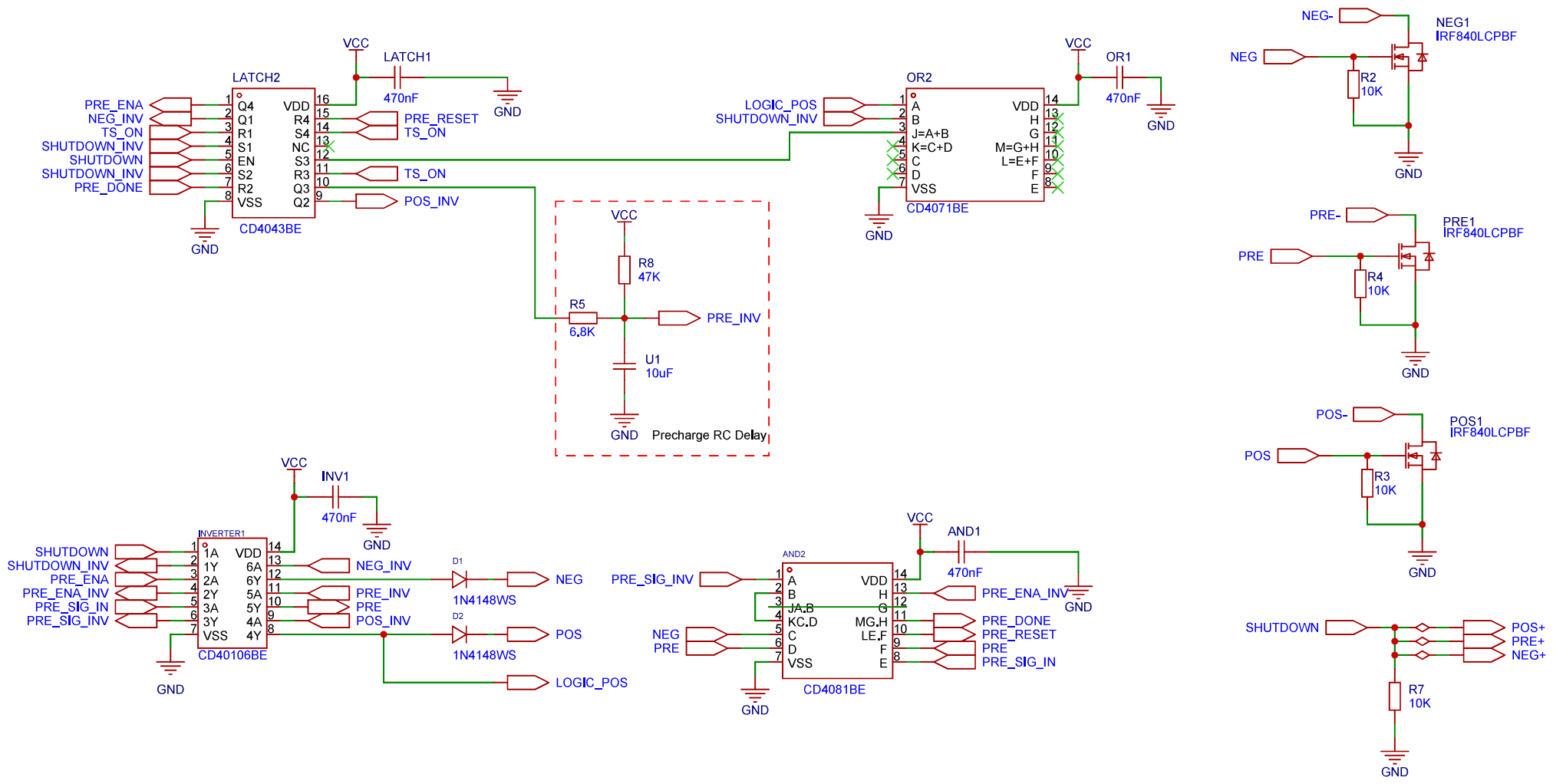

Schematic	UBR28_CO_ATS_02A	Update Date	2025-06-12
		Create Date	2025-03-21
Page	Logic	Part Number	JLCPCB-002
Drawn	JACOB H	ATS	
Reviewed			
		VER	SIZE	PAGE 1 OF 2
UBRacing		V0.1	A4	EasyEDA.com

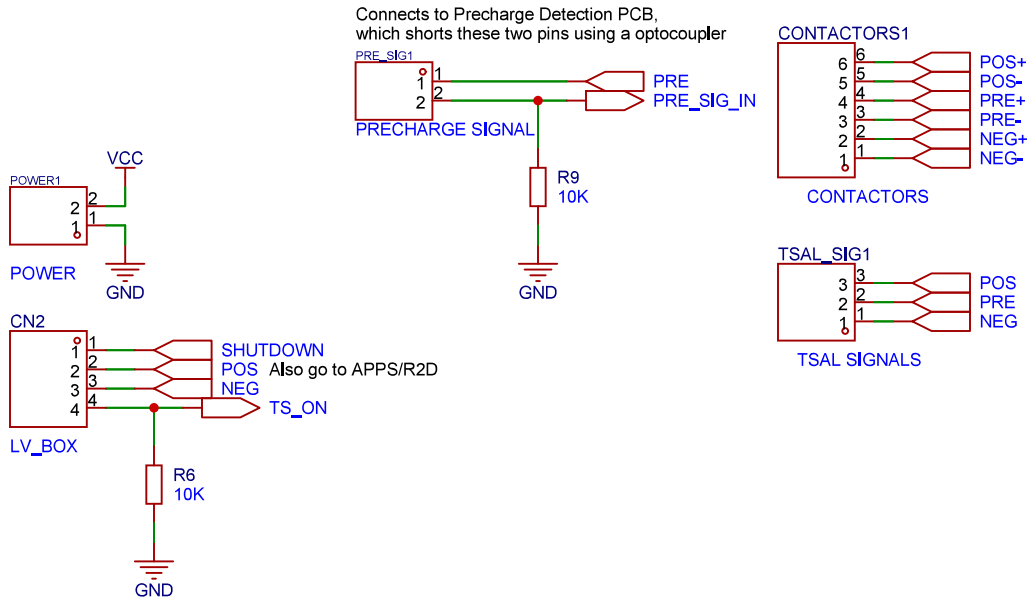

Schematic	UBR28_CO_ATS_02A	Update Date	2025-03-21
		Create Date	2025-03-21
Page	Headers	Part Number	JLCPCB-002
Drawn	ATS		
Reviewed			
	VER	SIZE	PAGE 2 OF 2
UBRacing	V0.1	A4	

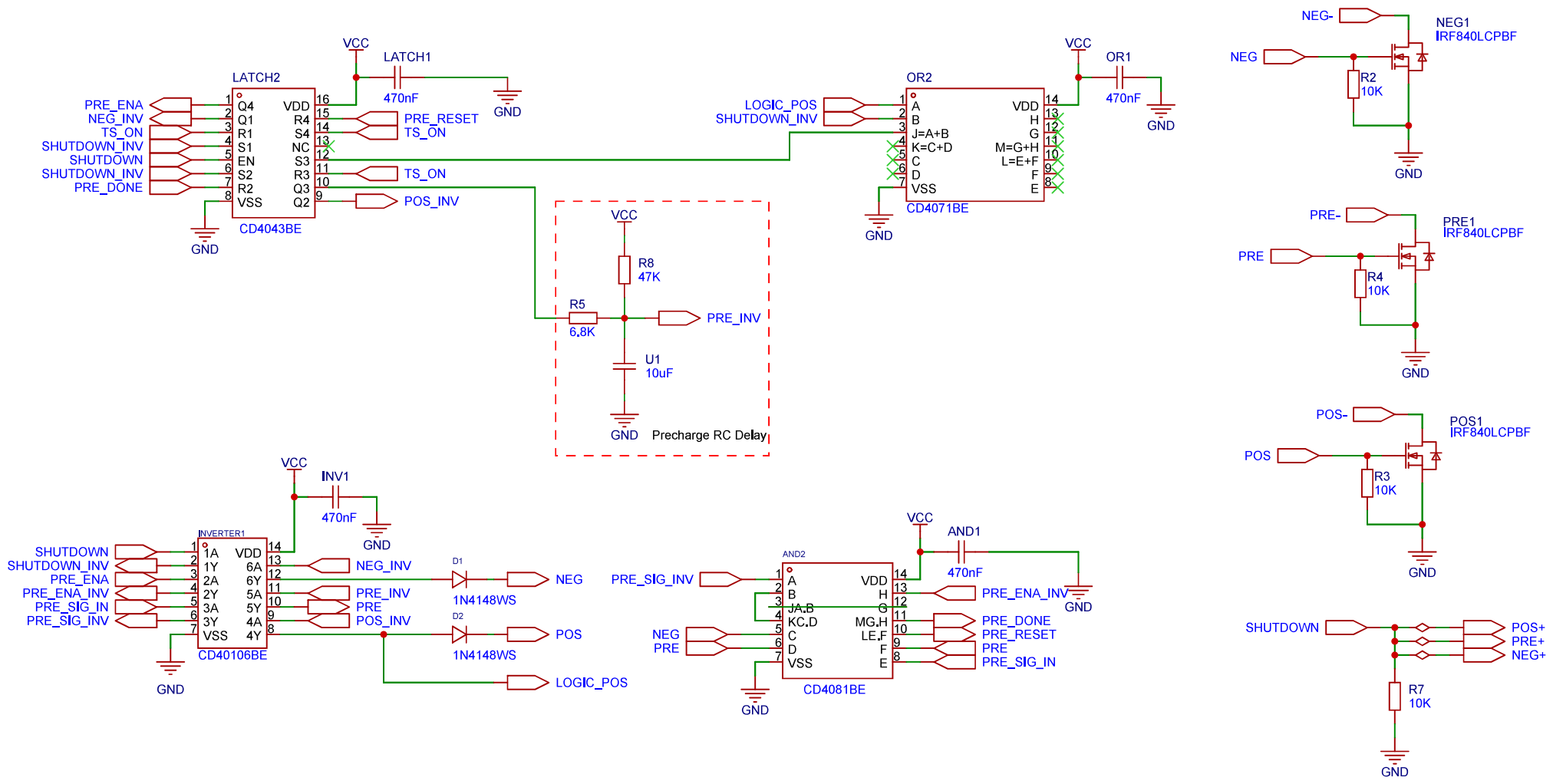

Schematic	UBR28_CO_ATS_02A	Update Date	2025-06-12
		Create Date	2025-03-21
Page	Logic	Part Number	JLCPCB-002
Drawn	JACOB H	ATS	
Reviewed			
		VER	SIZE	PAGE 1 OF 2
UBRacing		V0.1	A4	EasyEDA.com

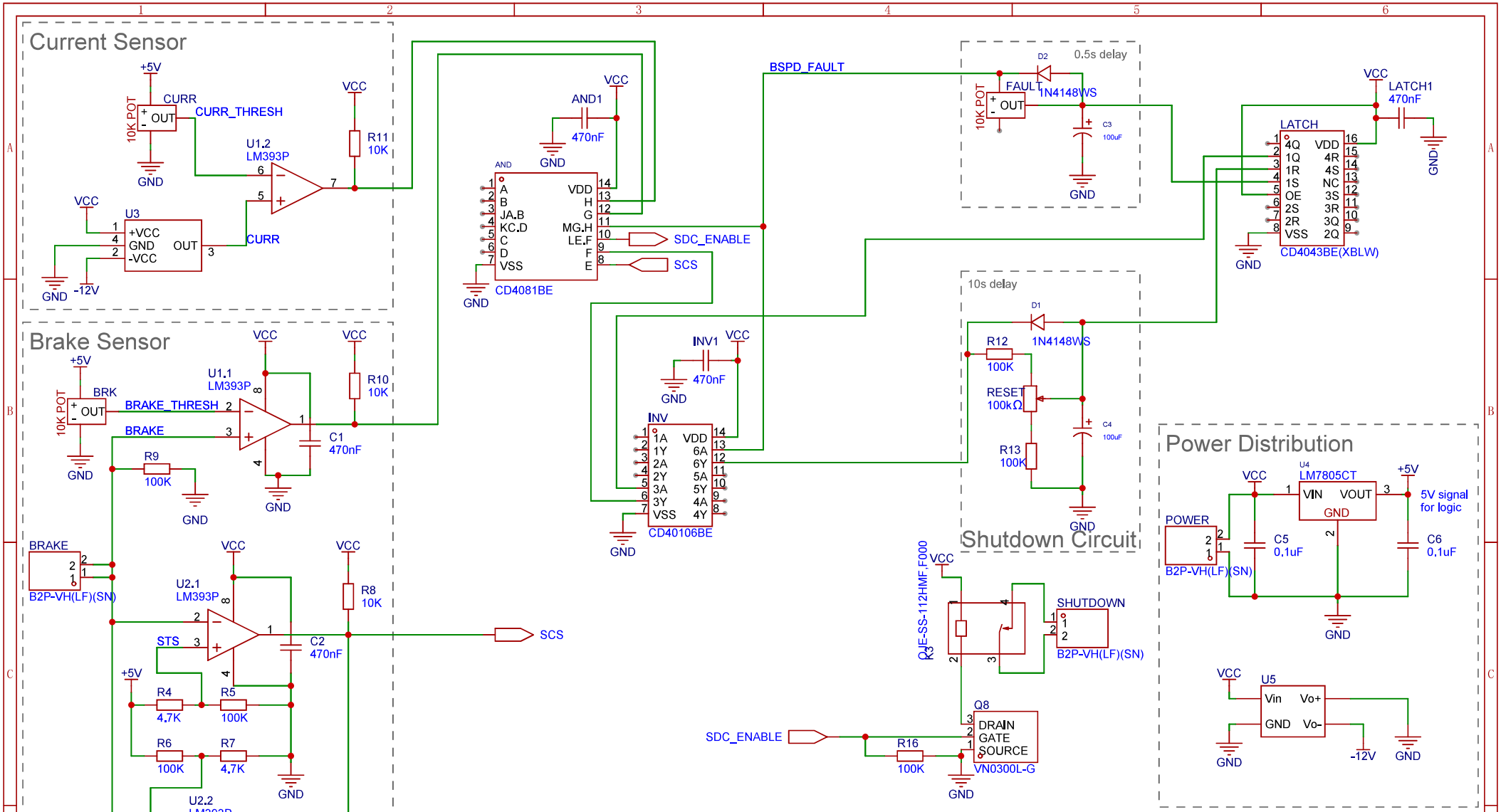

Schematic	UBR28_CO_BSPD_02A	Update Date	2025-06-12
		Create Date	2025-01-12
Page	P1	Part Number	
Drawn	CHRISTELLA S	BSPD	
Reviewed	JACOB H		
		VER	SIZE	PAGE 1 OF 1
UBRacing		V1.0	A4	

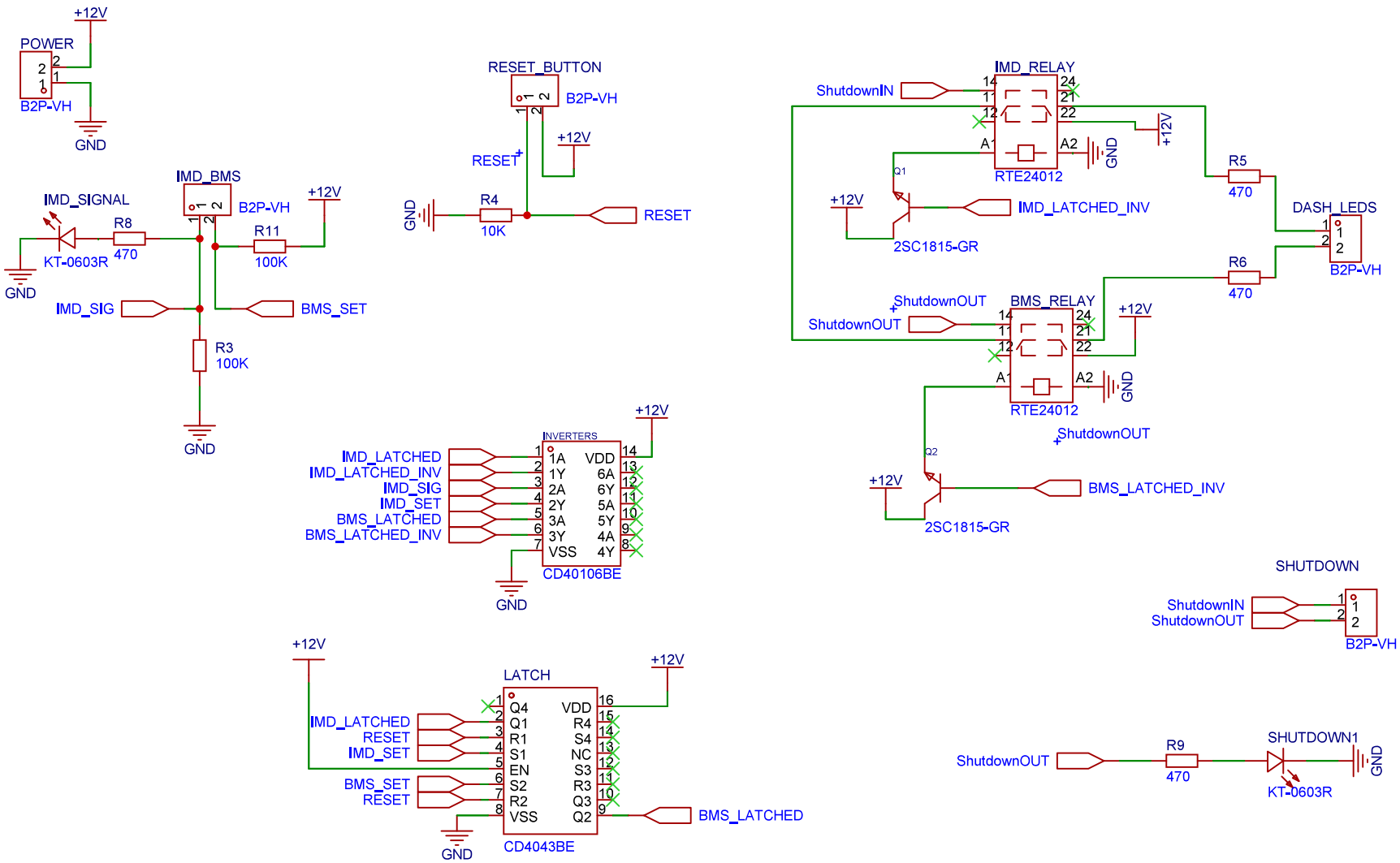

Schematic	UBR28_CO_IMDBMS_01A	Update Date	2025-06-12
		Create Date	2024-08-28
Page	P1	Part Number	JLCPCB-002
Drawn	JACOB H	IMD BMS LATCH	
Reviewed			
		VER	SIZE	PAGE 1 OF 1
UBRacing		V0.1	A4	

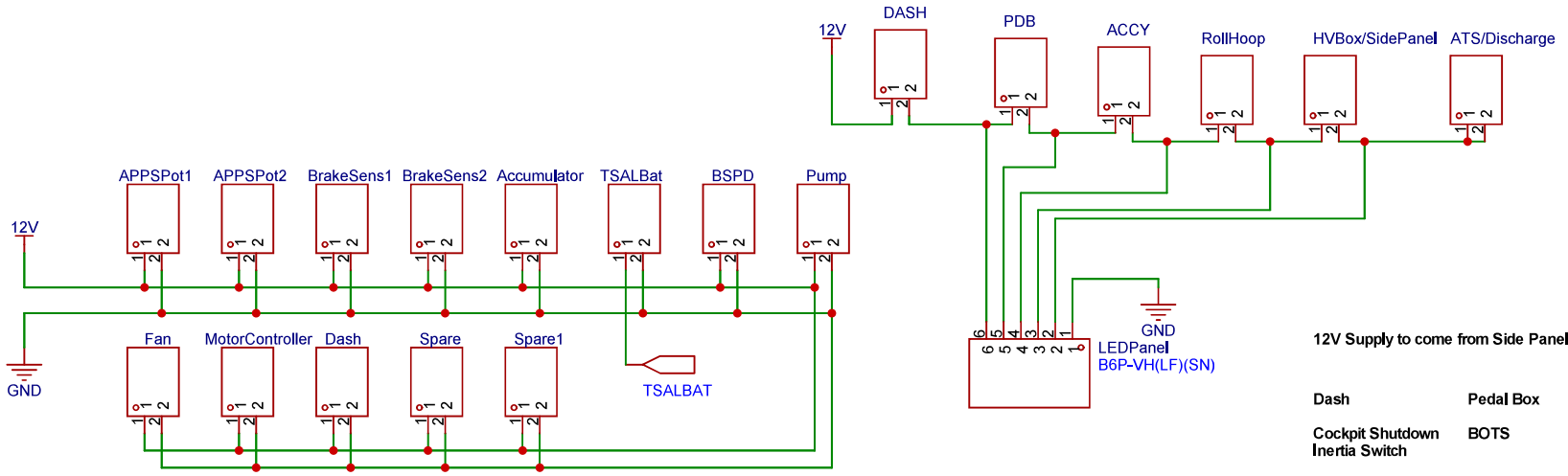

12V Supply to come from Side Panel LVMS

Dash	**Pedal Box**
Cockpit Shutdown **Inertia Switch**	**BOTS**
Accy	**Roll Hoop Left**
IMD/BMS Latch **Interlock**	**E-Stop Left**
HV Box/Side Panel	**ATS/Discharge**
BSPD **Interlocks** **E-Stop Right**	**ATS**

Schematic	UBR28_CO_POWERDIST_01A	Create at	2025-02-11
		Update at	2025-06-12
Board	Board1	Page	P1
Drawn	OLLIE C	POWER DISTRIBUTION	
Reviewed			
		Version	Size	Page 1 Total 1
UBRacing		V1.0	A4	

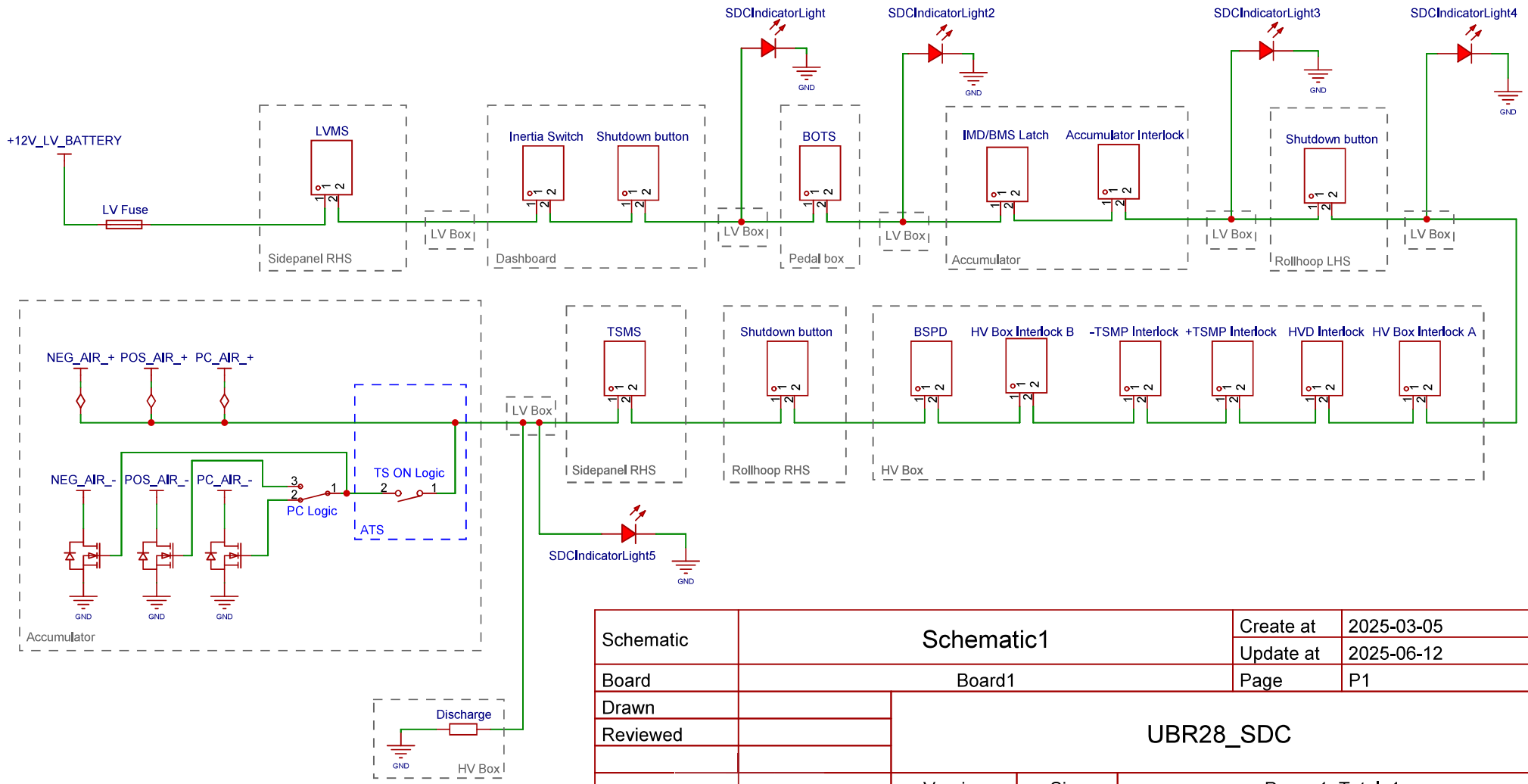

Schematic	Schematic1	Create at	2025-03-05
		Update at	2025-06-12
Board	Board1	Page	P1
Drawn		UBR28_SDC	
Reviewed			
		Version	Size	Page 1 Total 1
UBRacing		V1.0	A4	UBRacing

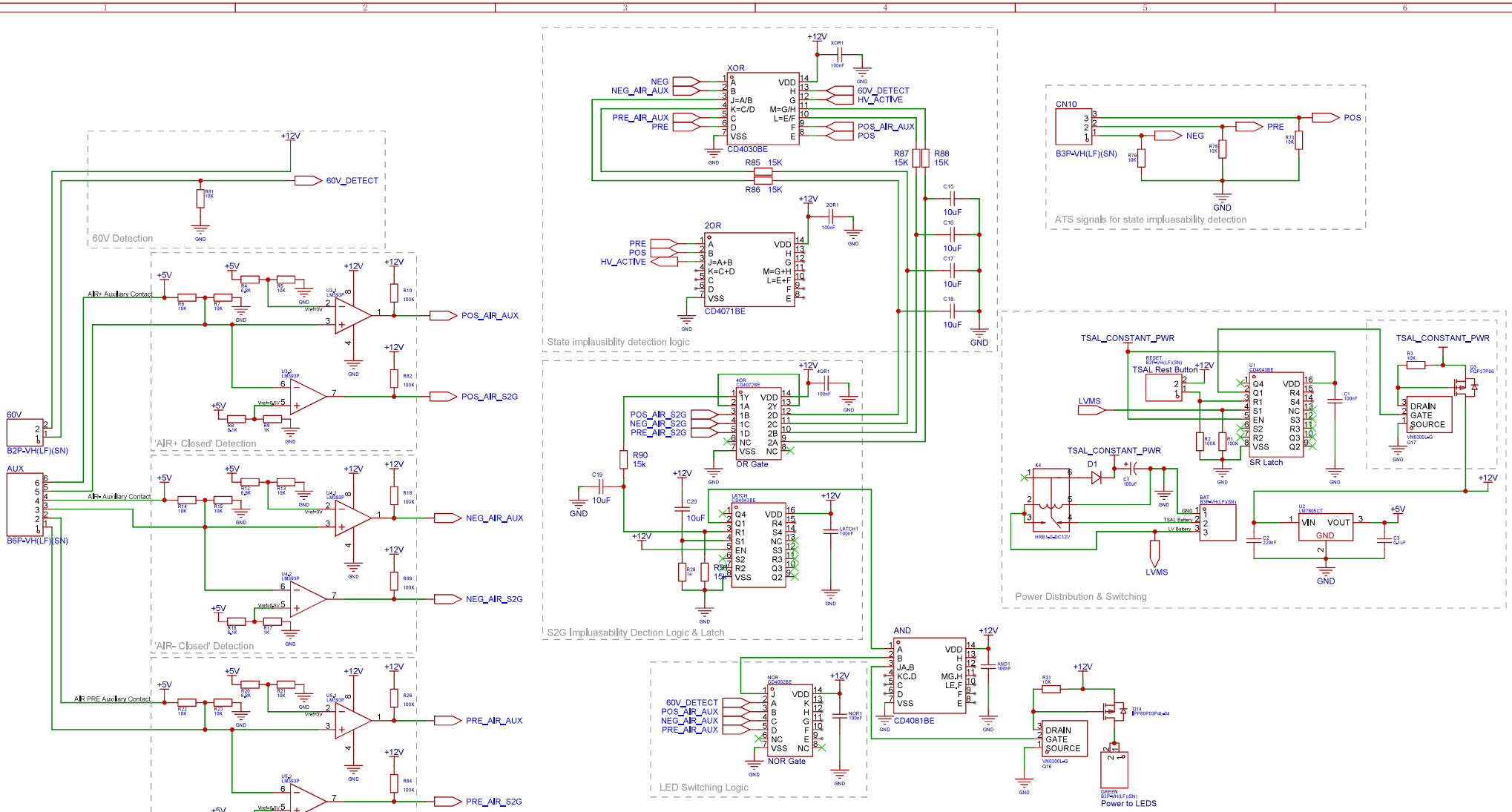

Schematic	UBR28_CO_TSAL_GREEN_02A	Update Date	2025-06-12
		Create Date	2025-02-17
Page	P1	Part Number	UBR28_CO_TSAL(G)_01A
Drawn	JOSEPH H	TSAL GREEN	
Reviewed	JACOB H		
		VER	SIZE	PAGE 1 OF 1
UBRacing		01A	A4	UBRacing

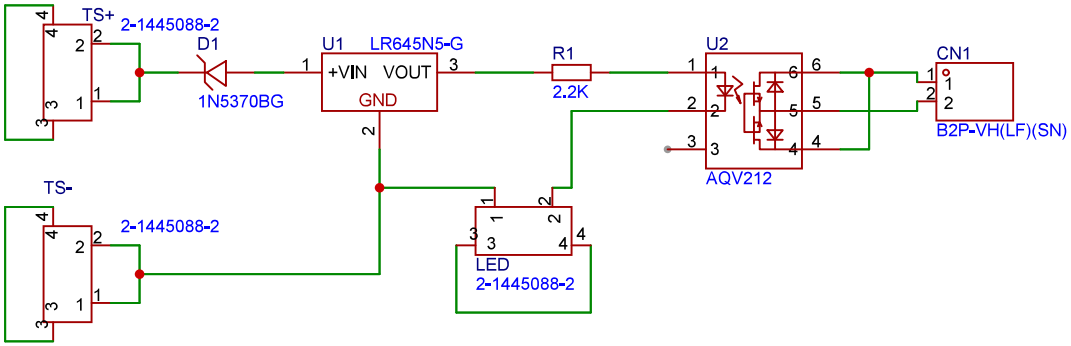

Schematic	UBR28_CO_VOLTAGE_DETECTION_02A	Update Date	2025-06-12
		Create Date	2025-04-01
Page	P1	Part Number	
Drawn	JACOB HASELDINE	VOLTAGE DETECTION	
Reviewed			
		VER	SIZE	PAGE 1 OF 1
UBRacing		V1.0	A4	

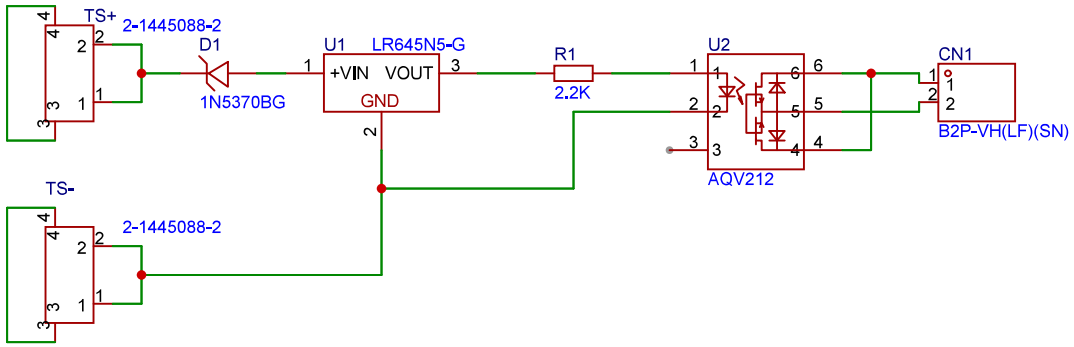

Schematic	UBR28_PT_PRECHARGE_01A	Update Date	2025-06-12
		Create Date	2025-02-11
Page	P1	Part Number	
Drawn		PRECHARGE	
Reviewed			
		VER	SIZE	PAGE 1 OF 1
UBRacing		V1.0	A4	

Revisions

Rev.	Date	Author	Description
	08.06.2025	Aleksander Matuszkiewicz	Minor aesthetic changes to drawing.

Bill of Materials

Id	Type	Manufacturer	Part Number	Quantity
1	Connector	Molex	70107-0004	1
2	Connector	Souriau	8STA61626SN	1
3	Ring Terminal			19
5	Cable	MULTICOMP PRO	MP010248	≥ 0 in
7	Contact	Souriau	8599-0702 JJ	26
8	Cable	igus	CF240.03.24	

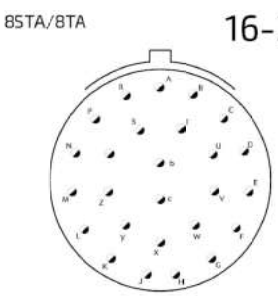

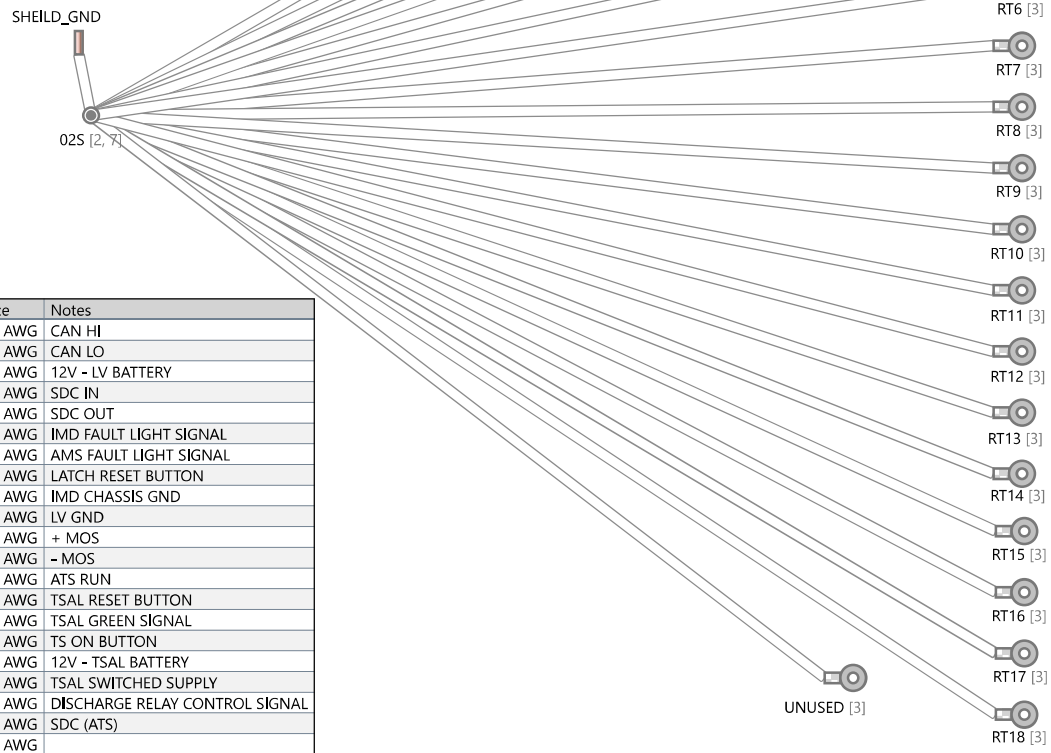

From	To	Conductor	Color	Size
BMS_CAN.1	02S.A	CBL4.Brown		26 AWG
BMS_CAN.2	02S.B	CBL4.White-Brown		26 AWG

From	To	Conductor	Color	Size
RT1	02S.C	CBL2.White-1		22 AWG

From	To	Conductor	Color	Size
RT2	02S.D	CBL2.Brown-2		22 AWG

From	To	Conductor	Color	Size
RT3	02S.E	CBL2.Green-3		22 AWG

From	To	Conductor	Color	Size
RT4	02S.F	CBL2.Yellow-4		22 AWG

From	To	Conductor	Color	Size
RT5	02S.G	CBL2.Gray-5		22 AWG

From	To	Conductor	Color	Size
RT6	02S.H	CBL2.Pink-6		22 AWG

From	To	Conductor	Color	Size
RT7	02S.J	CBL2.Blue-7		22 AWG

From	To	Conductor	Color	Size
RT8	02S.K	CBL2.Red-8		22 AWG

From	To	Conductor	Color	Size
RT9	02S.L	CBL2.Black-9		22 AWG

From	To	Conductor	Color	Size
RT10	02S.M	CBL2.Violet-10		22 AWG

From	To	Conductor	Color	Size
RT11	02S.N	CBL2.Gray-Pink-11		22 AWG

From	To	Conductor	Color	Size
RT12	02S.P	CBL2.Red-Blue-12		22 AWG

From	To	Conductor	Color	Size
RT13	02S.R	CBL2.White-Green-13		22 AWG

From	To	Conductor	Color	Size
RT14	02S.S	CBL2.Brown-Green-14		22 AWG

From	To	Conductor	Color	Size
RT15	02S.T	CBL2.White-Yellow-15		22 AWG

From	To	Conductor	Color	Size
RT16	02S.U	CBL2.Yellow-Brown-16		22 AWG

From	To	Conductor	Color	Size
RT17	02S.V	CBL2.White-Gray-17		22 AWG

From	To	Conductor	Color	Size
RT18	02S.W	CBL2.Gray-Brown-18		22 AWG

From	To	Conductor	Color	Size	Notes
02S.A	BMS_CAN.1	CBL4.Brown		26 AWG	CAN HI
02S.B	BMS_CAN.2	CBL4.White-Brown		26 AWG	CAN LO
02S.C	RT1	CBL2.White-1		22 AWG	12V - LV BATTERY
02S.D	RT2	CBL2.Brown-2		22 AWG	SDC IN
02S.E	RT3	CBL2.Green-3		22 AWG	SDC OUT
02S.F	RT4	CBL2.Yellow-4		22 AWG	IMD FAULT LIGHT SIGNAL
02S.G	RT5	CBL2.Gray-5		22 AWG	AMS FAULT LIGHT SIGNAL
02S.H	RT6	CBL2.Pink-6		22 AWG	LATCH RESET BUTTON
02S.J	RT7	CBL2.Blue-7		22 AWG	IMD CHASSIS GND
02S.K	RT8	CBL2.Red-8		22 AWG	LV GND
02S.L	RT9	CBL2.Black-9		22 AWG	+ MOS
02S.M	RT10	CBL2.Violet-10		22 AWG	- MOS
02S.N	RT11	CBL2.Gray-Pink-11		22 AWG	ATS RUN
02S.P	RT12	CBL2.Red-Blue-12		22 AWG	TSAL RESET BUTTON
02S.R	RT13	CBL2.White-Green-13		22 AWG	TSAL GREEN SIGNAL
02S.S	RT14	CBL2.Brown-Green-14		22 AWG	TS ON BUTTON
02S.T	RT15	CBL2.White-Yellow-15		22 AWG	12V - TSAL BATTERY
02S.U	RT16	CBL2.Yellow-Brown-16		22 AWG	TSAL SWITCHED SUPPLY
02S.V	RT17	CBL2.White-Gray-17		22 AWG	DISCHARGE RELAY CONTROL SIGNAL
02S.W	RT18	CBL2.Gray-Brown-18		22 AWG	SDC (ATS)
02S.X	UNUSED	CBL2.White-Pink-19		22 AWG	
02S.Y	UNUSED	CBL2.Pink-Brown-20		22 AWG	
02S.Z	UNUSED	CBL2.White-Blue-21		22 AWG	
02S.a	UNUSED	CBL2.Brown-Blue-22		22 AWG	
02S.b	UNUSED	CBL2.White-Red-23		22 AWG	
02S.c	SHEILD_GND	CBL2.Shield			

Title	LV to Accumulator Harness
Part Number	UBR28_CO_ACCUMULATOR_01B
Description	
Revision	----

	Name	Date
Drawn By	Joseph Hoare	----
Eng Approved	----	----
Mfg Approved	----	----
QA	----	----

UBRacing

This document contains confidential and proprietary information that cannot be reproduced or divulged, in whole or in part, without written authorization.

Revisions

Rev.	Date	Author	Description

Notes

1. CONNECT LW1 TO CF240.03.14 SHIELD. SOLDERED CONNECTION.

Bill of Materials

Id	Type	Manufacturer	Part Number	Quantity	Description
1	CONNECTOR	Souriau	8STA6-12-98SA	2	ALUMINIUM PLUG, BLACK ZINC NICKEL PLATING, FEMALE CONTACTS
2	CONTACT	Souriau	85990707900	19	#20 S 8LT-ST-D
3	CABLE	Igus	IGUS CHAINFLEX CF240.03.14 (14x22 AWG CORES)	280 mm	14 CORE, 22 AWG IGUS CABLE
4	WIRE	RS PRO	RS PRO 22 AWG	50 mm	CONNECTS PIN "H" TO SHIELD
5	BOOT	HellermannTyton	401-55045	1	STRAIGHT BOOT
6	BOOT	HellermannTyton	411-54026	1	90° BOOT
7	LABEL			2	ENDPOINT LABELS

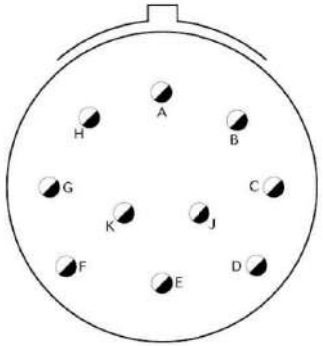

LABEL: "03S - HV BOOT"

STRAIGHT BOOT (401-55045)

03S [1, 2, 5] — 03S - HV BOOT [7] — 280 mm — 04S - LV BOOT [7] — 04S [1, 2, 6]

From	To	Conductor	Color	Size
LW1	04S.J	W1.White-Yellow		22 AWG

LW1

1

50 mm

LABEL: "04S - LV BOOT"

90° BOOT (411-54026)

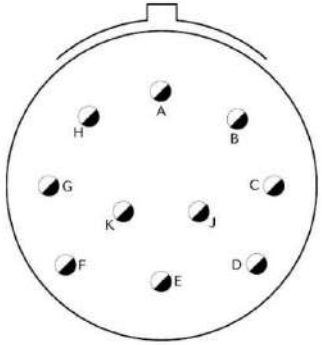

From	To	Conductor	Color	Size	Notes
03S.A	04S.A	CBL1.White		22 AWG	12V BSPD
03S.B	04S.B	CBL1.Brown		22 AWG	TSAL SWITCHED 12V
03S.C	04S.C	CBL1.Green		22 AWG	DISCHARGE RELAY CONTROL SIGNAL (END OF SDC)
03S.D	04S.D	CBL1.Yellow		22 AWG	SHUTDOWN CIRCUIT IN
03S.E	04S.E	CBL1.Gray		22 AWG	LV GROUND
03S.F	04S.F	CBL1.Pink		22 AWG	BSPD ACTIVE LIGHT
03S.G	04S.G	CBL1.Blue		22 AWG	BRAKE SENSOR 1 SIGNAL
03S.H	04S.H	CBL1.Red		22 AWG	TSAL RED SIGNAL
03S.I	04S.I	CBL1.Black		22 AWG	BUZZER

From	To	Conductor	Color	Size	Notes
04S.A	03S.A	CBL1.White		22 AWG	12V BSPD
04S.B	03S.B	CBL1.Brown		22 AWG	TSAL SWITCHED 12V
04S.C	03S.C	CBL1.Green		22 AWG	DISCHARGE RELAY CONTROL SIGNAL (END OF SDC)
04S.D	03S.D	CBL1.Yellow		22 AWG	SHUTDOWN CIRCUIT IN
04S.E	03S.E	CBL1.Gray		22 AWG	LV GROUND
04S.F	03S.F	CBL1.Pink		22 AWG	BSPD ACTIVE LIGHT
04S.G	03S.G	CBL1.Blue		22 AWG	BRAKE SENSOR 1 SIGNAL
04S.H	03S.H	CBL1.Red		22 AWG	TSAL RED SIGNAL
04S.I	03S.I	CBL1.Black		22 AWG	BUZZER
04S.J	LW1	W1.White-Yellow		22 AWG	SHIELD GROUND

	Name	Date
Drawn By	Aleksander M	19.03.2025
Eng Approved	----	----
Mfg Approved	----	----
QA	----	----

Title: LV-HV Harness

Part Number: UBR28_CO_LV_HV_01

Description: LV TO HV HARNESS

Revision: 01B

This document contains confidential and proprietary information that cannot be reproduced or divulged, in whole or in part, without written authorization.

Revisions

Rev.	Date	Author	Description
	02/04/2025	Christella Sande	REVISED SHIELD GROUND, ADDED BOOTS
	20/05/2025	Christella Sande	CHANGED SHIELD GROUND TO MC END OF HARNESS

Notes

Bill of Materials

Id	Type	Manufacturer	Part Number	Quantity
1	Connector	Souriau	8STA01298SN	1
2	Cable		igus chainflex CF240.03.14 (14x22 AWG Cores)	
3	Connector	Binder	99-5662-75-19	1
4	Connector	Binder	99-0436-14-05	1
5	Wire			≥ 0 in
6	Wire			≥ 0 in
7	Boot	HellermannTyton	154-42G	1
8	Wire		22 AWG Black	

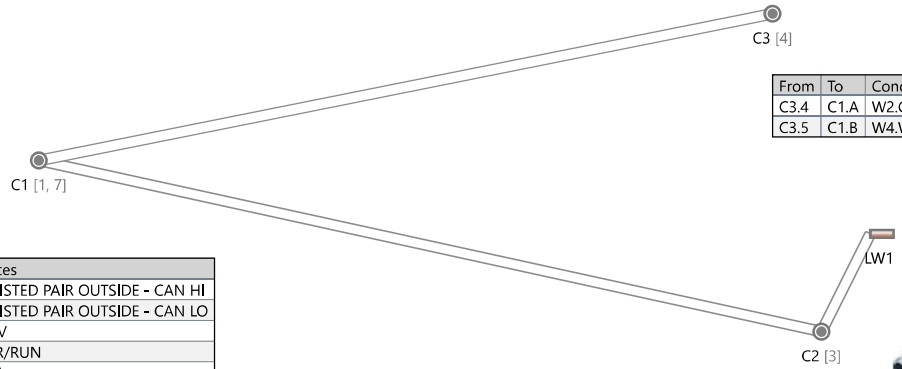

From	To	Conductor	Color	Size	From Contact PN	Notes
C3.4	C1.A	W2.Green		26 AWG		TWISTED PAIR OUTSIDE - CAN HI
C3.5	C1.B	W4.White-Green		26 AWG		TWISTED PAIR OUTSIDE - CAN LO

From	To	Conductor	Color	Size
LW1	C2.C	W5.Black		22 AWG

From	To	Conductor	Color	Size	From Contact PN	Notes
C1.A	C3.4	W2.Green		26 AWG		TWISTED PAIR OUTSIDE - CAN HI
C1.B	C3.5	W4.White-Green		26 AWG		TWISTED PAIR OUTSIDE - CAN LO
C1.D	C2.D	CBL1.Brown		22 AWG		12 V
C1.E	C2.G	CBL1.Green		22 AWG		FGR/RUN
C1.F	C2.H	CBL1.Yellow		22 AWG		AIN+
C1.G	C2.J	CBL1.Gray		22 AWG		AIN-
C1.H	C2.K	CBL1.Pink		22 AWG		Logic GND
C1.J	C2.T	CBL1.Blue		22 AWG		RFE
C1.K	C2.U	CBL1.Red		22 AWG		12 V

From	To	Conductor	Color	Size	From Contact PN	Notes
C2.C	LW1	W5.Black		22 AWG		GROUND
C2.D	C1.D	CBL1.Brown		22 AWG		12 V
C2.G	C1.E	CBL1.Green		22 AWG		FGR/RUN
C2.H	C1.F	CBL1.Yellow		22 AWG		AIN+
C2.J	C1.G	CBL1.Gray		22 AWG		AIN-
C2.K	C1.H	CBL1.Pink		22 AWG		Logic GND
C2.T	C1.J	CBL1.Blue		22 AWG		RFE
C2.U	C1.K	CBL1.Red		22 AWG		12 V

	Name	Date
Drawn By	----	----
Eng Approved	----	----
Mfg Approved	----	----
QA	----	----

Title ----	Part Number UBR28_CO_LV_MC_01A
Description	Revision ----

This document contains confidential and proprietary information that cannot be reproduced or divulged, in whole or in part, without written authorization.

Revisions

Rev.	Date	Author	Description
1	08/04/2025	Oliver Clough	Initial Release
2	21/05/2025	Oliver Clough	Brake Pressure Pin Change

Notes

1. No Boot, Apply 2 layers of heatshrink [8] over connector
2. Service Loop on all contacts, wrap with Kapton Tape

Bill of Materials

Id	Type	Manufacturer	Part Number	Quantity
1	Connector	Souriau	8STA61419SN	1
2	Connector	TE Connectivity	AS607-98SA	2
3	Connector	Souriau	8STA60898SN	3
4	Wire		22AWG White	55 mm
5	Cable		igus chainflex CF240.03.14 (14x22 AWG Cores)	≥ 1580 mm
6	Transition Boot	TE Raychem	382A034-15-0	1
8	Heat Shrink	HellermannTyton	SE28 12.7/6.4	2
10	Boot	HellermannTyton	155-42G	4

From	To	Conductor	Color	Size	Notes
Sheild_Ground	LV_Box_PDB_S.R	CBL1.Shield			Sheild Ground: Connected at LV Box End only

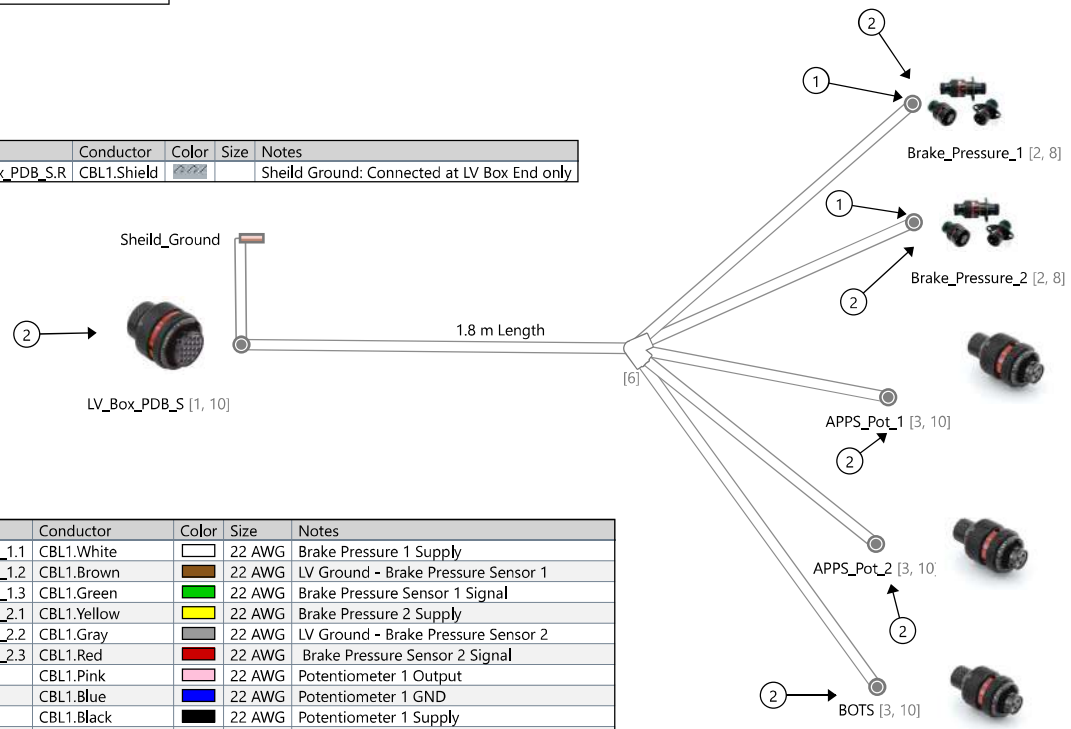

From	To	Conductor	Color	Size
Brake_Pressure_1.1	LV_Box_PDB_S.A	CBL1.White		22 AWG
Brake_Pressure_1.2	LV_Box_PDB_S.B	CBL1.Brown		22 AWG
Brake_Pressure_1.3	LV_Box_PDB_S.C	CBL1.Green		22 AWG

From	To	Conductor	Color	Size
Brake_Pressure_2.1	LV_Box_PDB_S.D	CBL1.Yellow		22 AWG
Brake_Pressure_2.2	LV_Box_PDB_S.E	CBL1.Gray		22 AWG
Brake_Pressure_2.3	LV_Box_PDB_S.F	CBL1.Red		22 AWG

From	To	Conductor	Color	Size
APPS_Pot_1.A	LV_Box_PDB_S.G	CBL1.Pink		22 AWG
APPS_Pot_1.B	LV_Box_PDB_S.H	CBL1.Blue		22 AWG
APPS_Pot_1.C	LV_Box_PDB_S.J	CBL1.Black		22 AWG

From	To	Conductor	Color	Size
APPS_Pot_2.A	LV_Box_PDB_S.K	CBL1.Violet		22 AWG
APPS_Pot_2.B	LV_Box_PDB_S.L	CBL1.Gray-Pink		22 AWG
APPS_Pot_2.C	LV_Box_PDB_S.M	CBL1.Red-Blue		22 AWG

From	To	Conductor	Color	Size
BOTS.A	LV_Box_PDB_S.N	CBL1.White-Green		22 AWG
BOTS.B	LV_Box_PDB_S.P	CBL1.Brown-Green		22 AWG

From	To	Conductor	Color	Size	Notes
LV_Box_PDB_S.A	Brake_Pressure_1.1	CBL1.White		22 AWG	Brake Pressure 1 Supply
LV_Box_PDB_S.B	Brake_Pressure_1.2	CBL1.Brown		22 AWG	LV Ground - Brake Pressure Sensor 1
LV_Box_PDB_S.C	Brake_Pressure_1.3	CBL1.Green		22 AWG	Brake Pressure Sensor 1 Signal
LV_Box_PDB_S.D	Brake_Pressure_2.1	CBL1.Yellow		22 AWG	Brake Pressure 2 Supply
LV_Box_PDB_S.E	Brake_Pressure_2.2	CBL1.Gray		22 AWG	LV Ground - Brake Pressure Sensor 2
LV_Box_PDB_S.F	Brake_Pressure_2.3	CBL1.Red		22 AWG	Brake Pressure Sensor 2 Signal
LV_Box_PDB_S.G	APPS_Pot_1.A	CBL1.Pink		22 AWG	Potentiometer 1 Output
LV_Box_PDB_S.H	APPS_Pot_1.B	CBL1.Blue		22 AWG	Potentiometer 1 GND
LV_Box_PDB_S.J	APPS_Pot_1.C	CBL1.Black		22 AWG	Potentiometer 1 Supply
LV_Box_PDB_S.K	APPS_Pot_2.A	CBL1.Violet		22 AWG	Potentiometer 2 Output
LV_Box_PDB_S.L	APPS_Pot_2.B	CBL1.Gray-Pink		22 AWG	Potentiometer 2 GND
LV_Box_PDB_S.M	APPS_Pot_2.C	CBL1.Red-Blue		22 AWG	Potentiometer 2 Supply
LV_Box_PDB_S.N	BOTS.A	CBL1.White-Green		22 AWG	Shutown Circuit Out
LV_Box_PDB_S.P	BOTS.B	CBL1.Brown-Green		22 AWG	Shutdown Circuit In
LV_Box_PDB_S.R	Sheild_Ground	CBL1.Shield			Sheild Ground: Connected at LV Box End only

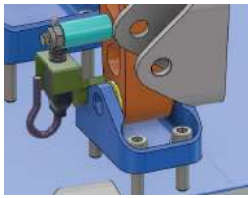

	Name	Date
Drawn By	Oliver Clough	8/4/25
Eng Approved	----	----
Mfg Approved	----	----
QA	----	----

Title	Pedal Box to LV Box Harness
Part Number	UBR28_CO_LV_PDB_01A
Description	
Revision	01A

UBRacing

This document contains confidential and proprietary information that cannot be reproduced or divulged, in whole or in part, without written authorization.

Revisions

Rev.	Date	Author	Description
	13/06/2025	CHRISTELLA S	SPELLING CHANGES

Notes

Bill of Materials

Id	Type	Manufacturer	Part Number	Quantity
3	Wire	RS Pro	22 AWG Red	3
4	Wire	RS Pro	22 AWG Black	4
6	Connector	Souriau	8STA61099SN	1
9	Connector	Souriau	8STA01099PN	1

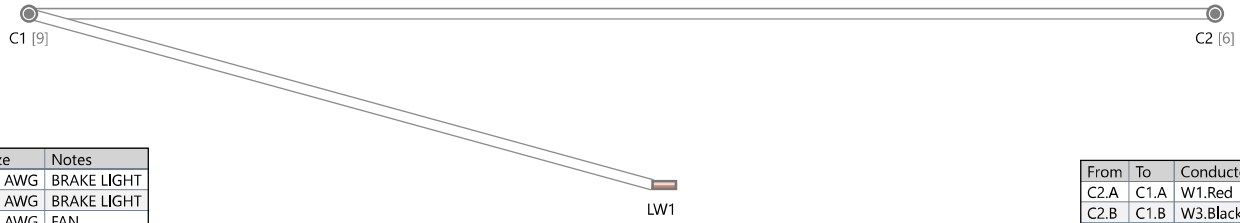

From	To	Conductor	Color	Size	Notes
C1.A	C2.A	W1.Red		22 AWG	BRAKE LIGHT
C1.B	C2.B	W3.Black		22 AWG	BRAKE LIGHT
C1.C	C2.C	W2.Red		22 AWG	FAN
C1.D	C2.D	W4.Black		22 AWG	FAN
C1.E	LW1	W5.Black		22 AWG	SHIELD
C1.F	C2.F	W6.Red		22 AWG	PUMP POS
C1.G	C2.G	W7.Black		22 AWG	PUMP NEG

From	To	Conductor	Color	Size
LW1	C1.E	W5.Black		22 AWG

From	To	Conductor	Color	Size	Notes
C2.A	C1.A	W1.Red		22 AWG	BRAKE LIGHT
C2.B	C1.B	W3.Black		22 AWG	BRAKE LIGHT
C2.C	C1.C	W2.Red		22 AWG	FAN
C2.D	C1.D	W4.Black		22 AWG	FAN
C2.F	C1.F	W6.Red		22 AWG	PUMP POS
C2.G	C1.G	W7.Black		22 AWG	PUMP NEG

Title	Part Number
Ground Connection from LV Box to Rear of Car	UBR28_CO_LV_REAR_01A
Description	Revision ----

	Name	Date
Drawn By	Leo	3-4-25
Eng Approved	----	----
Mfg Approved	----	----
QA	----	----

rapidHARNESS

This document contains confidential and proprietary information that cannot be reproduced or divulged, in whole or in part, without written authorization.

Revisions

Rev.	Date	Author	Description
01A	08/04/2025	SAM BOND	INITIAL RELEASE
01B	24/05/2025	SAM BOND	ADDED LV GROUND (TSAL) AND CHANGED RING TERMINAL TO LOOSE END
01C	24/05/2025	SAM BOND	MOVED BUZZER GROUND TO ROLLHOOP AND ADDED IMD GROUND AS LOOSE END
01D	08.06.2025	ALEKSANDER MATUSZKIEWICZ	JST B3P VH SN ADDED TO TSAL LIGHTS

Bill of Materials

Id	Type	Manufacturer	Part Number	Quantity
1	Connector	Souriau	8STA01298PN	1
14	Wire		Black	1250 mm
15	Connector	JST	B3P-VH(LF)(SN)	1
16	Wire		RS PRO	

From	To	Conductor	Color	Size	Notes
C1.1	TSAL_LIGHTS.1	W2.White		22 AWG	RED LED SUPPLY
C1.2	TSAL_LIGHTS.2	W4.Brown		22 AWG	GREEN LED SUPPLY
C1.3	ROLLHOOP	W6.Green		22 AWG	BUZZER SUPPLY
C1.4	ROLLHOOP	W8.Yellow		22 AWG	LV GROUND (BUZZER)
C1.5	LW1	W10.Gray		22 AWG	IMD ROLLHOOP GROUND
C1.6	TSAL_LIGHTS.3	W18.Black		22 AWG	LV GROUND (TSAL)
C1.7	SDC_LHS	W12.Pink		22 AWG	SDC OUT
C1.8	SDC_LHS	W14.Blue		22 AWG	SDC IN
C1.9	RT1	W16.White-Yellow		22 AWG	SHIELD GROUND

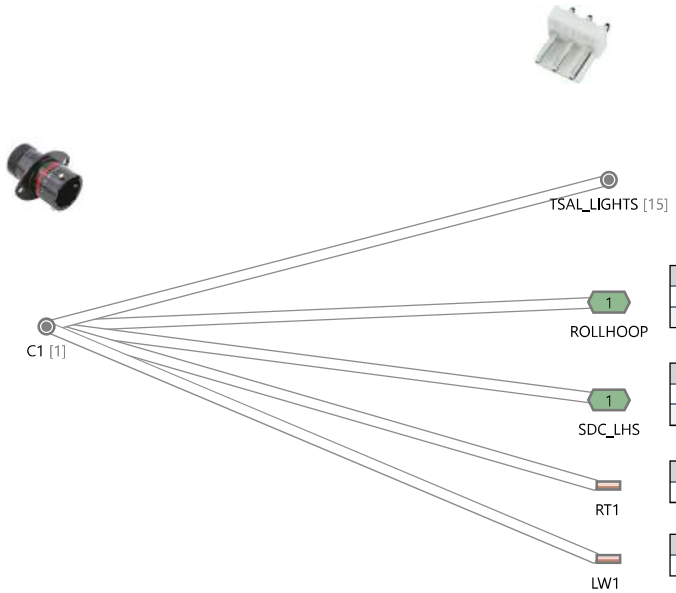

From	To	Conductor	Color	Size
TSAL_LIGHTS.1	C1.1	W2.White		22 AWG
TSAL_LIGHTS.2	C1.2	W4.Brown		22 AWG
TSAL_LIGHTS.3	C1.6	W18.Black		22 AWG

From	To	Conductor	Color	Size	Notes
ROLLHOOP	C1.3	W6.Green		22 AWG	BUZZER SUPPLY
ROLLHOOP	C1.4	W8.Yellow		22 AWG	LV GROUND (BUZZER)

From	To	Conductor	Color	Size	Notes
SDC_LHS	C1.7	W12.Pink		22 AWG	SDC OUT
SDC_LHS	C1.8	W14.Blue		22 AWG	SDC IN

From	To	Conductor	Color	Size	Notes
RT1	C1.9	W16.White-Yellow		22 AWG	SHIELD GROUND

From	To	Conductor	Color	Size	Notes
LW1	C1.5	W10.Gray		22 AWG	IMD ROLLHOOP GROUND

	Name	Date
Drawn By	SAM BOND	24/05/2025
Eng Approved	----	----
Mfg Approved	----	----
QA	----	----

Title: LV TO ROLLHOOP HARNESS

Part Number: UBR28_CO_LV_ROLLHOOP_01D

Description:

Revision: 01D

This document contains confidential and proprietary information that cannot be reproduced or divulged, in whole or in part, without written authorization.

Revisions

Rev.	Date	Author	Description
01A	28/03/2025	Simon Ram	FIRST DRAFT HARNESS
01B	02/04/2025	Simon Ram	ADDED: BOOTS, BOOT LABELLING. CHANGED WIRE ORDER
01C	08.06.2025	ALEKSANDER MATUSZKIEWICZ	WIRES AND LABELS ADDED, CONDUCTOR ORDERING CHANGED

Notes

1. ALL SLEEVING TO BE HELLERMAN-TYTON SE28 UNLESS OTHERWISE STATED.
2. ALL MEASUREMENTS TO CENTRE 90, FACE OF CONNECTOR (STRAIGHT BOOT), CENTRE TRANSITION OR SPECIFIED DATUM
3. LABEL ALL CONNNECTORS WITH CONNECTOR ID AND TITLE COVER LABEL WITH CCUV
4. FIT BLANKING PLUGS BEHIND ALL UNUSED CONNECTOR CONTACTS
5. BUNDLE ORIENTATION NOT CRITICAL UNLESS OTHERWISE STATED

Bill of Materials

Id	Type	Manufacturer	Part Number	Quantity
1	Connector	Souriau	8STA61415SN	2
2	Contact		22 AWG	30
19	Cable		igus chainflex CF240.03.14 (14x22 AWG Cores)	1000 mm
21	Boot	HellermannTyton	155-42G	1
22	Wire		16 AWG Red	1000 mm
24	Wire		22 AWG Black	1000 mm
25	Label			2

From	To	Conductor	Color	Size	Notes
06S.1	06S_2.1	CBL1.White		22 AWG	BSPD CURRENT SENSOR SIGNAL TEST (OUT)
06S.2	06S_2.2	CBL1.Brown		22 AWG	LATCH RESET BUTTON + (IN)
06S.3	06S_2.3	CBL1.Green		22 AWG	LATCH RESET BUTTON - (OUT)
06S.4	06S_2.4	CBL1.Yellow		22 AWG	TSAL RESET BUTTON + (12V) (IN)
06S.5	06S_2.5	CBL1.Gray		22 AWG	TSAL RESET BUTTON - SIG) (IN)
06S.6	06S_2.6	CBL1.Pink		22 AWG	TSMS NEGATIVE (OUT)
06S.7	06S_2.7	CBL1.Blue		22 AWG	SHUTDOWN INDICATOR LIGHT 1 (IN)
06S.8	06S_2.8	CBL1.Red		22 AWG	SHUTDOWN INDICATOR LIGHT 2 - (OUT)
06S.9	06S_2.9	CBL1.Black		22 AWG	SHUTDOWN INDICATOR LIGHT 3 (OUT)
06S.10	06S_2.10	CBL1.Violet		22 AWG	SHUTDOWN INDICATOR LIGHT 4 (OUT)
06S.11	06S_2.11	CBL1.Gray-Pink		22 AWG	SHIELD GROUND (OUT)
06S.12	06S_2.12	CBL1.Red-Blue		22 AWG	TSAL BATTERY POSITIVE (IN)
06S.13	06S_2.13	CBL1.Brown-Green		22 AWG	UNUSED
06S.14	06S_2.14	W1.Red		16 AWG	LVMS
06S.15	06S_2.15	W3.Black		22 AWG	GROUND

From	To	Conductor	Color	Size	Notes
06S_2.1	06S.1	CBL1.White		22 AWG	BSPD CURRENT SENSOR SIGNAL TEST (OUT)
06S_2.2	06S.2	CBL1.Brown		22 AWG	LATCH RESET BUTTON + (IN)
06S_2.3	06S.3	CBL1.Green		22 AWG	LATCH RESET BUTTON - (OUT)
06S_2.4	06S.4	CBL1.Yellow		22 AWG	TSAL RESET BUTTON + (12V) (IN)
06S_2.5	06S.5	CBL1.Gray		22 AWG	TSAL RESET BUTTON - SIG) (IN)
06S_2.6	06S.6	CBL1.Pink		22 AWG	TSMS NEGATIVE (OUT)
06S_2.7	06S.7	CBL1.Blue		22 AWG	SHUTDOWN INDICATOR LIGHT 1 (IN)
06S_2.8	06S.8	CBL1.Red		22 AWG	SHUTDOWN INDICATOR LIGHT 2 - (OUT)
06S_2.9	06S.9	CBL1.Black		22 AWG	SHUTDOWN INDICATOR LIGHT 3 (OUT)
06S_2.10	06S.10	CBL1.Violet		22 AWG	SHUTDOWN INDICATOR LIGHT 4 (OUT)
06S_2.11	06S.11	CBL1.Gray-Pink		22 AWG	SHIELD GROUND (OUT)
06S_2.12	06S.12	CBL1.Red-Blue		22 AWG	TSAL BATTERY POSITIVE (IN)
06S_2.13	06S.13	CBL1.Brown-Green		22 AWG	UNUSED
06S_2.14	06S.14	W1.Red		16 AWG	LVMS
06S_2.15	06S.15	W3.Black		22 AWG	GROUND

	Name	Date
Drawn By	SIMON RAM	28/03/2025
Eng Approved	----	----
Mfg Approved	----	----
QA	----	----

Title	HARNESS LV BOX TO SIDE PANEL RHS	Part Number	UBR28_CO_LV_LV_SIDE
Description	HARNESS FROM LV BOX TO SIDE PANEL RHS	Revision	01C

This document contains confidential and proprietary information that cannot be reproduced or divulged, in whole or in part, without written authorization.

Revisions

Rev.	Date	Author	Description

Bill of Materials

Id	Type	Manufacturer	Part Number	Quantity
2	Wire	RS Pro	8738992	4
3	Connector	Souriau	8STA61098SN	1

Notes

From	To	Conductor	Color
C1.1	ST1	W1.Orange	
C1.2	ST1	W2.Orange	
C1.3	ST1	W3.Orange	
C1.4	C1.5	W4.Orange	
C1.5	C1.4	W4.Orange	
C1.6			

From	To	Conductor	Color
ST1	C1.1	W1.Orange	
ST1	C1.2	W2.Orange	
ST1	C1.3	W3.Orange	

Title	----
Part Number	HV+ Measurement Points
Description	
Revision	----

	Name	Date
Drawn By	Kiarna Chandy	6.12.2025
Eng Approved	----	----
Mfg Approved	----	----
QA	----	----

This document contains confidential and proprietary information that cannot be reproduced or divulged, in whole or in part, without written authorization.

Revisions

Rev.	Date	Author	Description
01A	24/03/2025	Jorge Blanco	Initial drawing
01B	26/03/2025	Jorge Blanco	EVERYTHING CAPITAL LETTERS

Notes

(1) PINS M AND N ARE NOT PART OF THE IGUS CABLE.
THESE ARE INDIVIDUAL WIRES TO BE TWISTED AROUND THE IGUS CABLE.

Bill of Materials

Id	Type	Manufacturer	Part Number	Quantity
3	Cable		igus chainflex CF240.03.14 (14x22 AWG Cores)	1800 mm
5	Connector	Souriau	8STA61419SN	2
6	Wire		CAN HI	1800mm
7	Wire		CAN LOW	1800 mm

08P [5] — 08S [5]

From	To	Conductor	Color	Size	Notes
08P.A	08S.A	CBL2.White		22 AWG	12V
08P.B	08S.B	CBL2.Brown		22 AWG	SHUTDOWN CIRCUIT IN
08P.C	08S.C	CBL2.Green		22 AWG	SHUTDOWN CIRCUIT OUT
08P.D	08S.D	CBL2.Yellow		22 AWG	IMD FAULT LIGHT SIGNAL +
08P.E	08S.E	CBL2.Gray		22 AWG	AMS FAULT LIGHT SIGNAL +
08P.F	08S.F	CBL2.Pink		22 AWG	TS ON BUTTON +
08P.G	08S.G	CBL2.Blue		22 AWG	TS ON BUTTON -
08P.H	08S.H	CBL2.Red		22 AWG	TS OFF LED + (TSAL GREEN SIGNAL)
08P.J	08S.J	CBL2.Black		22 AWG	R2D BUTTON+
08P.K	08S.K	CBL2.Violet		22 AWG	R2D BUTTON -
08P.L	08S.L	CBL2.Gray-Pink		22 AWG	LV GROUND
08P.M	08S.M	W1.Violet-Orange		26 AWG	CAN HI
08P.N	08S.N	W2.Yellow-Black		26 AWG	CAN LOW
08P.P	08S.P	CBL2.Brown-Green		22 AWG	BSPD ACTIVE LED
08P.R	08S.R	CBL2.White-Yellow		22 AWG	SHIELD GROUND

(1) → 08P.M, 08P.N

From	To	Conductor	Color	Size	Notes
08S.A	08P.A	CBL2.White		22 AWG	12V
08S.B	08P.B	CBL2.Brown		22 AWG	SHUTDOWN CIRCUIT IN
08S.C	08P.C	CBL2.Green		22 AWG	SHUTDOWN CIRCUIT OUT
08S.D	08P.D	CBL2.Yellow		22 AWG	IMD FAULT LIGHT SIGNAL +
08S.E	08P.E	CBL2.Gray		22 AWG	AMS FAULT LIGHT SIGNAL +
08S.F	08P.F	CBL2.Pink		22 AWG	TS ON BUTTON +
08S.G	08P.G	CBL2.Blue		22 AWG	TS ON BUTTON -
08S.H	08P.H	CBL2.Red		22 AWG	TS OFF LED + (TSAL GREEN SIGNAL)
08S.J	08P.J	CBL2.Black		22 AWG	R2D BUTTON+
08S.K	08P.K	CBL2.Violet		22 AWG	R2D BUTTON -
08S.L	08P.L	CBL2.Gray-Pink		22 AWG	LV GROUND
08S.M	08P.M	W1.Violet-Orange		26 AWG	CAN HI
08S.N	08P.N	W2.Yellow-Black		26 AWG	CAN LOW
08S.P	08P.P	CBL2.Brown-Green		22 AWG	BSPD ACTIVE LED
08S.R	08P.R	CBL2.White-Yellow		22 AWG	SHIELD GROUND

(1) → 08S.M, 08S.N

Title	LV_DASHBOARD_SCHEMATIC
Part Number	UBR28_LV_DASH-01B
Description	MAIN HARNESS FROM HARNESS TO LV BOX
Revision	01B

	Name	Date
Drawn By	Jorge	24/03/2025
Eng Approved	----	----
Mfg Approved	----	----
QA	----	----

UBRacing

This document contains confidential and proprietary information that cannot be reproduced or divulged, in whole or in part, without written authorization.

REV	DESCRIPTION	INIT	DATE
01A	INITIAL RELEASE	EPC	28/01/2025

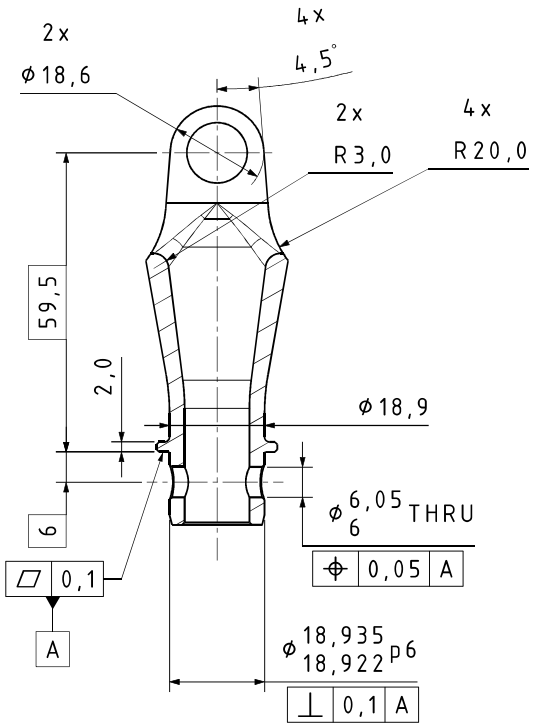

SECTION B-B

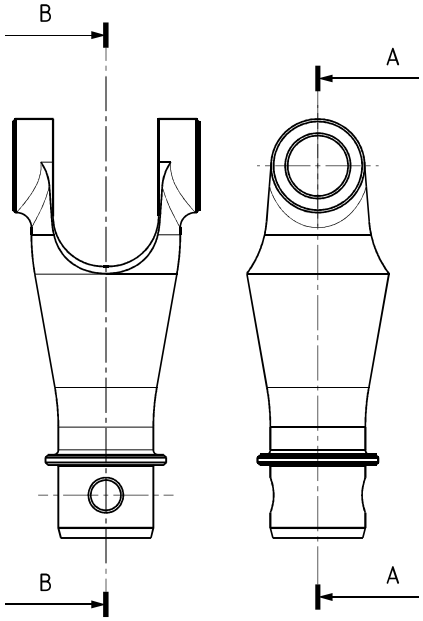

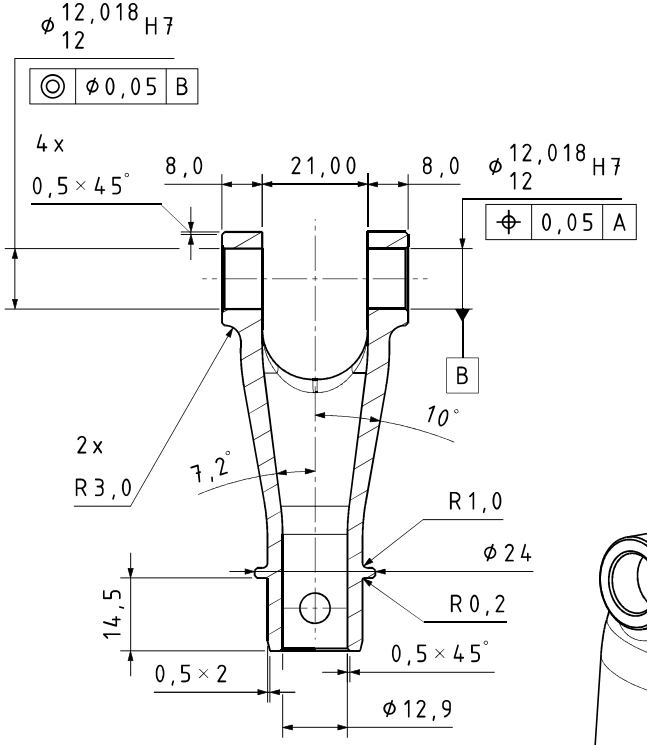

SECTION A-A

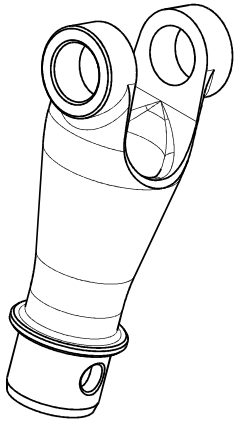

ISOMETRIC VIEW

NOTES:

1. BREAK ALL SHARP EDGES.

2. ANY UNDIMENSIONED FEATURES REFER TO CAD DATA. 0,2

UBRacing	MATERIAL CERTIFICATE REQUIRED DIMENSIONS IN MILIMETRES U.O.S	COMPONENT MASS (kg)	0,068	MATERIAL SPEC	TITANIUM 6AL/4V
				HEAT TREATMENT	N/A
A3	IF IN DOUBT - ASK DO NOT SCALE	DRAWN BY	EPC	SURFACE TREATMENT	N/A
	0 DECIMAL PLACES ±0.50 1 DECIMAL PLACE ±0.25 2 DECIMAL PLACES ±0.10 3 DECIMAL PLACES ±0.02 GENERAL CONCENTRICITY 0.1 TIR ANGULAR TOLERANCE ±0.25° REMOVE BURRS AND SHARP EDGES			DESCRIPTION	BOTTOM UNIVERSAL JOINT
TEL.	+44 (0)121 414 4218				
E-MAIL.	ubracing@gmail.com				
This drawing and the copyright herein are the property of UBRacing. It is private & confidential and is issued on the express condition that it is not modified,copied or communicated to any other party without the written consent of UBRacing.		SCALE	1:1	SHEET 1/1	PART NUMBER UBR28_ST_201

REV	DESCRIPTION	INIT	DATE
01A	INITIAL RELEASE	EPC	16/01/2025

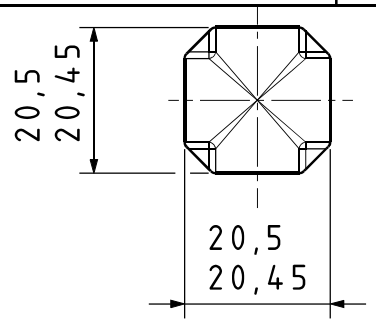

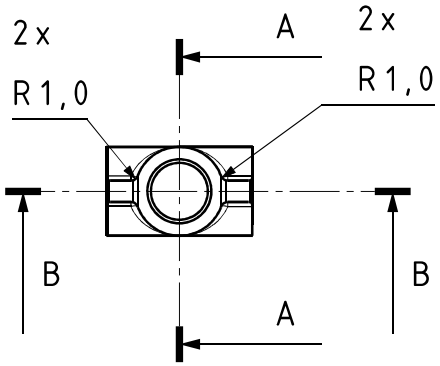

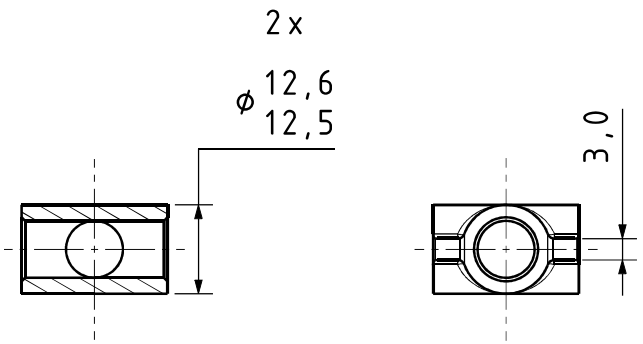

SECTION A-A

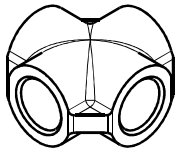

ISOMETRIC VIEW

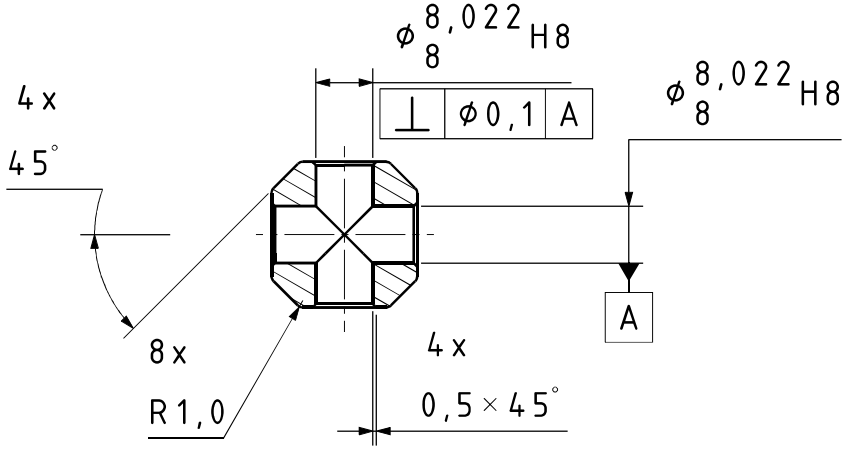

SECTION B-B

NOTES:

1. BREAK ALL SHARP EDGES

2. ANY UNDIMENSIONED FEATURES REFER TO CAD DATA ⌓ 0,2

3. 2 OFF PARTS REQUIRED.

UBRacing	MATERIAL CERTIFICATE REQUIRED DIMENSIONS IN MILIMETRES U.O.S	COMPONENT MASS (kg)	0,009	MATERIAL SPEC	TITANIUM 6AL 4V
				HEAT TREATMENT	N/A
A4	IF IN DOUBT - ASK DO NOT SCALE	0 DECIMAL PLACES ±0.50 1 DECIMAL PLACE ±0.25 2 DECIMAL PLACES ±0.10 3 DECIMAL PLACES ±0.02 GENERAL CONCENTRICITY 0.1 TIR ANGULAR TOLERANCE ±0.25° REMOVE BURRS AND SHARP EDGES	DRAWN BY EPC	SURFACE TREATMENT	N/A
				DESCRIPTION	UNIVERSAL JOINT CENTRE
TEL.	+44 (0)121 414 4218				
E-MAIL.	ubracing@gmail.com				
This drawing and the copyright herein are the property of UBRacing. It is private & confidential and is issued on the express condition that it is not modified, copied or communicated to any other party without the written consent of UBRacing.		SCALE	1:1	SHEET 1/1	PART NUMBER UBR28_ST_202

REV	DESCRIPTION	INIT	DATE
01A	INITIAL RELEASE	PL	27/01/2025

REFERENCE VIEW

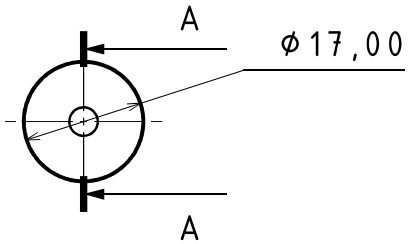

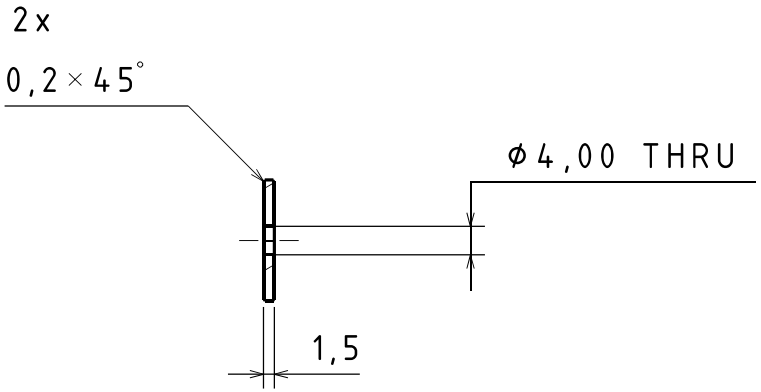

SECTION A-A

NOTES:

1. BREAK ALL SHARP EDGES
2. TEST FIT ON TO A M3 SHOULDER BOLT
3. 4 OFF PARTS ARE REQUIRED

UBRacing	MATERIAL CERTIFICATE REQUIRED DIMENSIONS IN MILIMETRES U.O.S	COMPONENT MASS (kg)	0.0009	MATERIAL SPEC	ALUMINIUM 7075
				HEAT TREATMENT	N/A
A4	IF IN DOUBT - ASK DO NOT SCALE	DRAWN BY	PL	SURFACE TREATMENT	N/A
	0 DECIMAL PLACES ±0.50 1 DECIMAL PLACE ±0.25 2 DECIMAL PLACES ±0.10 3 DECIMAL PLACES ±0.02 GENERAL CONCENTRICITY 0.1 TIR ANGULAR TOLERANCE ±0.25°			DESCRIPTION	ENDCAP
TEL.	+44 (0)121 414 4218				
E-MAIL.	ubracing@gmail.com				
	REMOVE BURRS AND SHARP EDGES				
	This drawing and the copyright herein are the property of UBRacing. It is private & confidential and is issued on the express condition that it is not modified, copied or communicated to any other party without the written consent of UBRacing.	SCALE	1:1	SHEET 1/1	PART NUMBER UBR28_ST_ENDCAP

REV	DESCRIPTION	INIT	DATE
01A	INITIAL RELEASE	EPC	17/01/2025
02A	BOND RAIL DIAMETER INCREASED AND LENGTH OF BOND AREA REDUCED.	EPC	04/03/2025

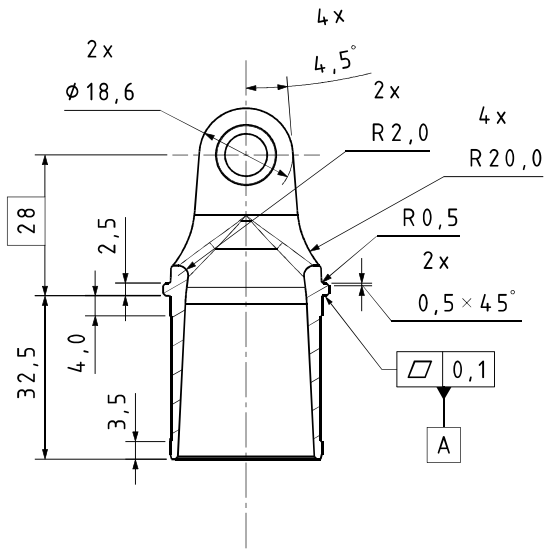

SECTION B-B

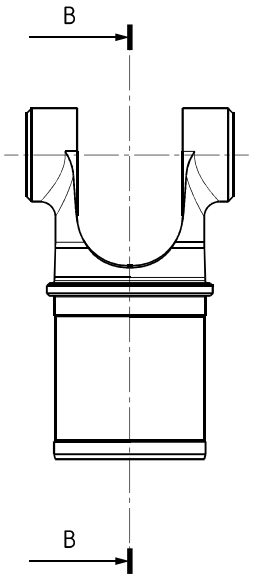

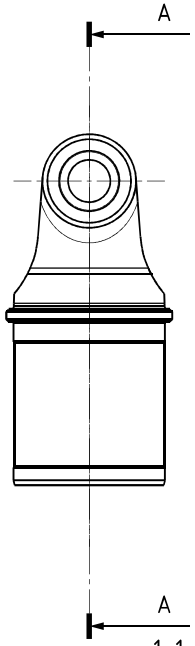

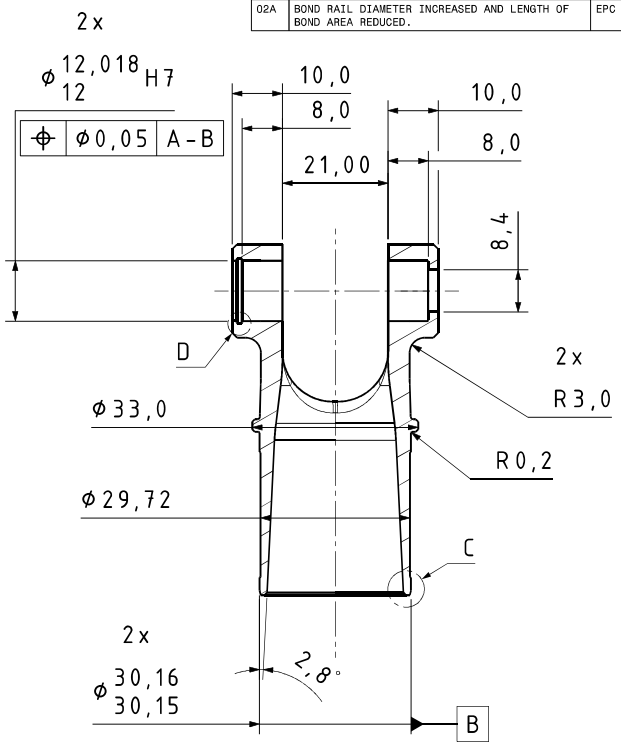

SECTION A-A

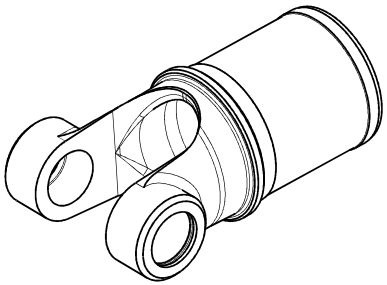

ISOMETRIC VIEW

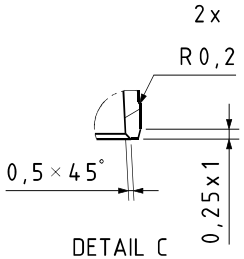

DETAIL C
SCALE 2:1

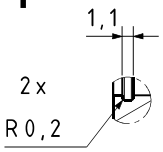

DETAIL D
SCALE 3:1

NOTES:

1. BREAK ALL SHARP EDGES.
2. ALL CO-AXIAL DIAMETERS ◎ ϕ0,05 B
3. ANY UNDIMENSIONS FEATURES REFER TO CAD DATA. ⌓ 0,2
4. 2 OFF PARTS REQUIRED.

UBRacing	MATERIAL CERTIFICATE REQUIRED DIMENSIONS IN MILIMETRES U.O.S	COMPONENT MASS (kg)	0,061	MATERIAL SPEC	TITANIUM 6AL 4V
				HEAT TREATMENT	N/A
A3	IF IN DOUBT - ASK DO NOT SCALE	DRAWN BY	EPC	SURFACE TREATMENT	N/A
	0 DECIMAL PLACES ±0.50 1 DECIMAL PLACE ±0.25 2 DECIMAL PLACES ±0.10 3 DECIMAL PLACES ±0.02 GENERAL CONCENTRICITY 0.1 TIR ANGULAR TOLERANCE ±0.25° REMOVE BURRS AND SHARP EDGES			DESCRIPTION	UNIVERSAL JOINT YOKE BOND
TEL.	+44 (0)121 414 4218				
E-MAIL.	ubracing@gmail.com				
		SCALE	1:1	SHEET 1/1	PART NUMBER UBR28_ST_205

This drawing and the copyright herein are the property of UBRacing. It is private & confidential and is issued on the express condition that it is not modified,copied or communicated to any other party without the written consent of UBRacing.

REV	DESCRIPTION	INIT	DATE
01A	INITIAL RELEASE	EPC	03/12/2024

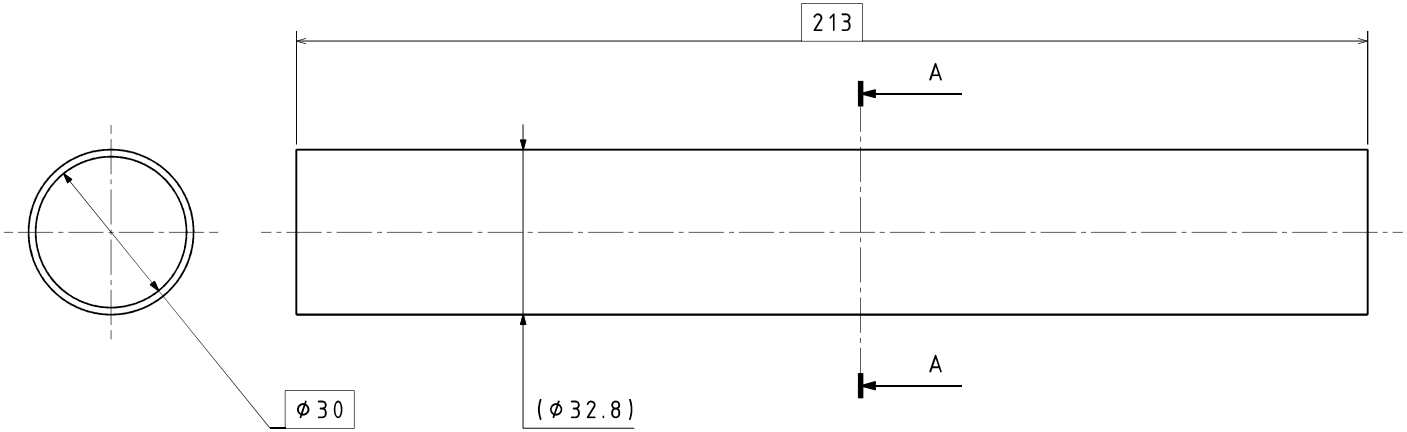

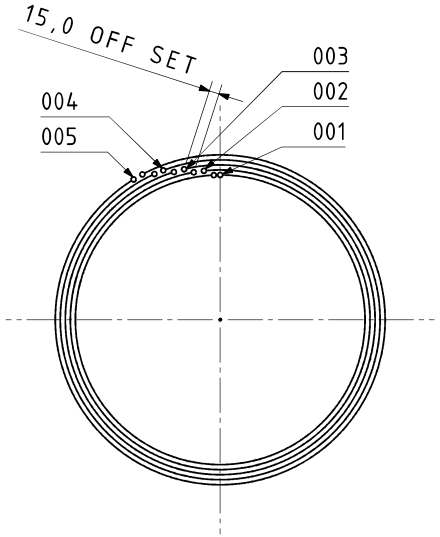

SECTION VIEW A-A
PLY LAYUP DETAIL
5mm OVERLAP NEEDED
SCALE 2:1

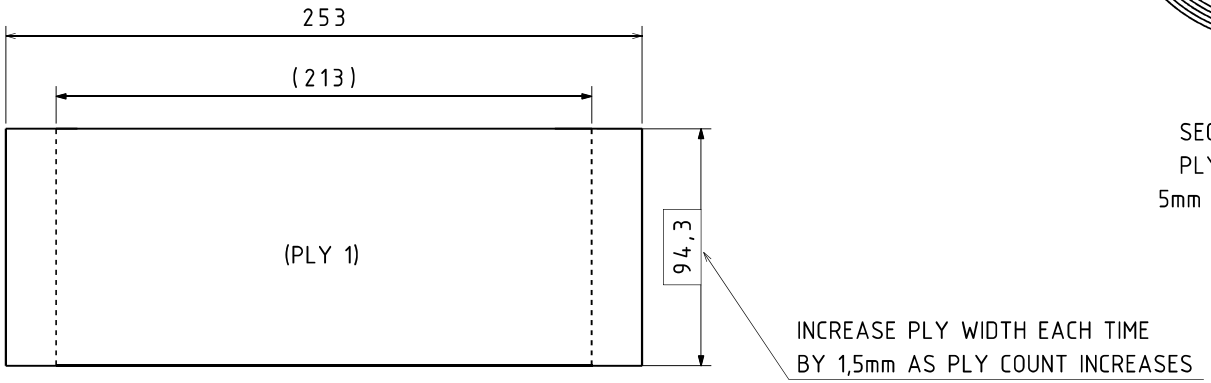

PLY CUTS TO FOLLOW SOLID LINES
SCALE 1:2

PLY ORIENTATION	PLY NUMBER
+/- 45	001
0/90	002
+/- 45	003
0/90	004
+/- 45	005

NOTES:

DETAILS FOR THE PLY CUTTING FOR COLUMN TUBE

1. FOLLOW PLY TABLE FOR ORIENTATION (LOC, B2)

2. ENSURE TO EXTEND LENGTH OF PLY BY 20mm ON BOTH ENDS.

3. 5mm OVERLAP BETWEEN ALL PLYS.

4. LAYUP ONTO ALUMINIUM MANDREL, ENSURE TO TREAT WITH RELEASE AGENT PRIOR TO LAYUP.

UBRacing

A3

IF IN DOUBT - ASK
DO NOT SCALE

TEL. +44 (0)121 414 4218
E-MAIL. ubracing@gmail.com

MATERIAL CERTIFICATE REQUIRED

DIMENSIONS IN MILIMETRES U.O.S

0 DECIMAL PLACES	±0.50
1 DECIMAL PLACE	±0.25
2 DECIMAL PLACES	±0.10
3 DECIMAL PLACES	±0.02
GENERAL CONCENTRICITY	0.1 TIR
ANGULAR TOLERANCE	±0.25°

REMOVE BURRS AND SHARP EDGES

This drawing and the copyright herein are the property of UBRacing. It is private & confidential and is issued on the express condition that it is not modified,copied or communicated to any other party without the written consent of UBRacing.

COMPONENT MASS (kg)	N/A
DRAWN BY	EPC
APPROVED BY	EPC
SCALE	1:1
MATERIAL SPEC	205gsm 2x2 Twill
HEAT TREATMENT	N/A
SURFACE TREATMENT	N/A
DESCRIPTION	CARBON COLUMN MANUFACTURING INFORMATION
SHEET	1/1
PART NUMBER	UBR28_ST_207

REV	DESCRIPTION	INIT	DATE
01A	INITIAL RELEASE	EPC	14/01/2025

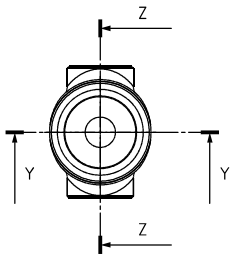

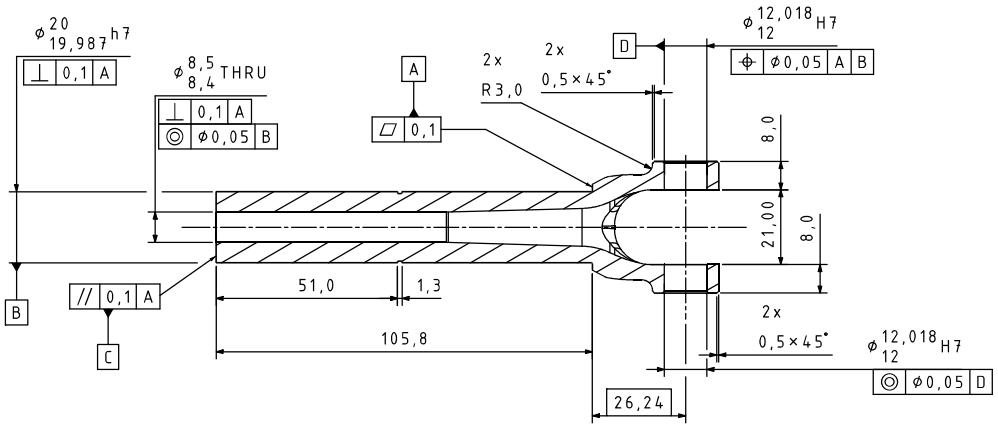

SECTION Z-Z

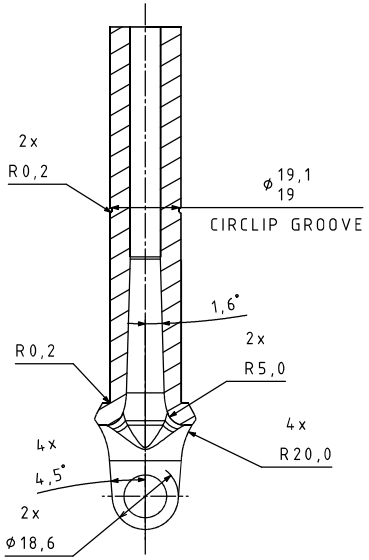

SECTION Y-Y

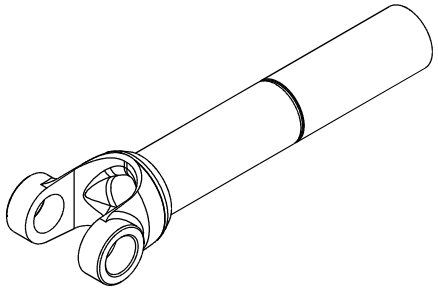

ISOMETRIC VIEW

NOTES:

1. ANY UNDIMENSIONED FEATURES REFER TO CAD DATA ⌓ 0,2

2. BREAK ALL SHARP EDGES

UBRacing	MATERIAL CERTIFICATE REQUIRED DIMENSIONS IN MILIMETRES U.O.S	COMPONENT MASS (kg)	0,153	MATERIAL SPEC	TITANIUM 6AL 4V
				HEAT TREATMENT	N/A
A2	IF IN DOUBT - ASK DO NOT SCALE	DRAWN BY	EPC	SURFACE TREATMENT	N/A
	0 DECIMAL PLACES ±0.50 1 DECIMAL PLACE ±0.25 2 DECIMAL PLACES ±0.10 3 DECIMAL PLACES ±0.02 GENERAL CONCENTRICITY 0.1 TIR ANGULAR TOLERANCE ±0.25° REMOVE BURRS AND SHARP EDGES			DESCRIPTION	TOP UNIVERSAL JOINT YOKE AND COLUMN
TEL.	+44 (0)121 414 4218				
E-MAIL.	ubracing@gmail.com				
This drawing and the copyright herein are the property of UBRacing. It is private & confidential and is issued on the express condition that it is not modified,copied or communicated to any other party without the written consent of UBRacing.		SCALE	1:1	SHEET 1/1	PART NUMBER UBR28_ST_208

REV	DESCRIPTION	INIT	DATE
01A	INITIAL RELEASE	EPC	28/01/2025

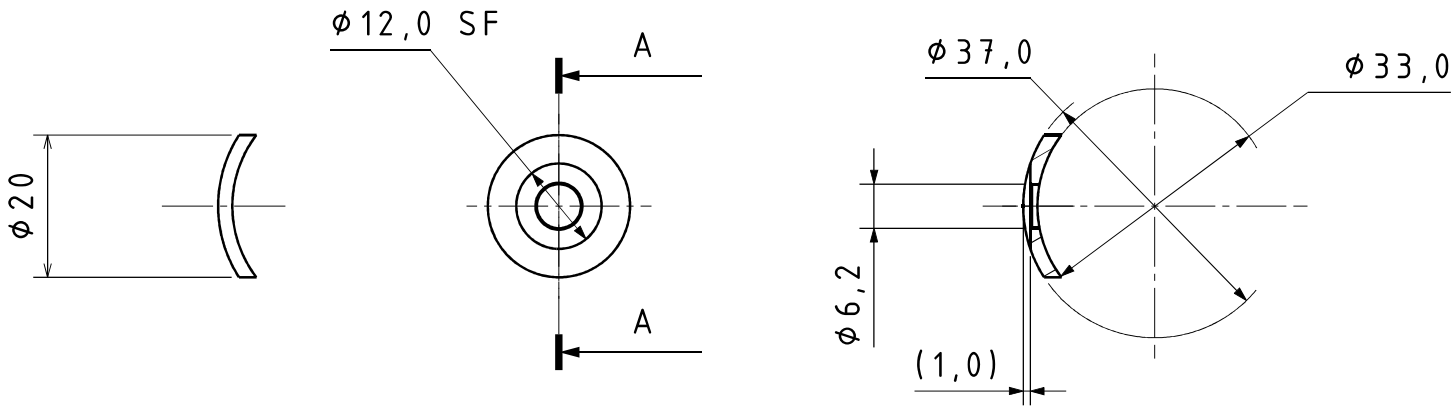

SECTION A-A

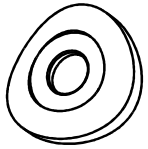

REFERENCE VIEW

NOTES:

1. BREAK ALL SHARP EDGES.

2. 4 OFF PARTS REQUIRED.

UBRacing	MATERIAL CERTIFICATE REQUIRED DIMENSIONS IN MILIMETRES U.O.S	COMPONENT MASS (kg)	0,002	MATERIAL SPEC	ALUMINIUM 7075
				HEAT TREATMENT	N/A
A4	IF IN DOUBT - ASK DO NOT SCALE	DRAWN BY	EPC	SURFACE TREATMENT	ANODIZE
	0 DECIMAL PLACES ±0.50 1 DECIMAL PLACE ±0.25 2 DECIMAL PLACES ±0.10 3 DECIMAL PLACES ±0.02 GENERAL CONCENTRICITY 0.1 TIR ANGULAR TOLERANCE ±0.25° REMOVE BURRS AND SHARP EDGES			DESCRIPTION	BONDED TOP HAT
TEL.	+44 (0)121 414 4218				
E-MAIL.	ubracing@gmail.com				
This drawing and the copyright herein are the property of UBRacing. It is private & confidential and is issued on the express condition that it is not modified, copied or communicated to any other party without the written consent of UBRacing.		SCALE	1:1	SHEET 1/1	PART NUMBER UBR28_ST_210

REV	DESCRIPTION	INIT	DATE
01A	INITIAL RELEASE	EPC	29/01/2025

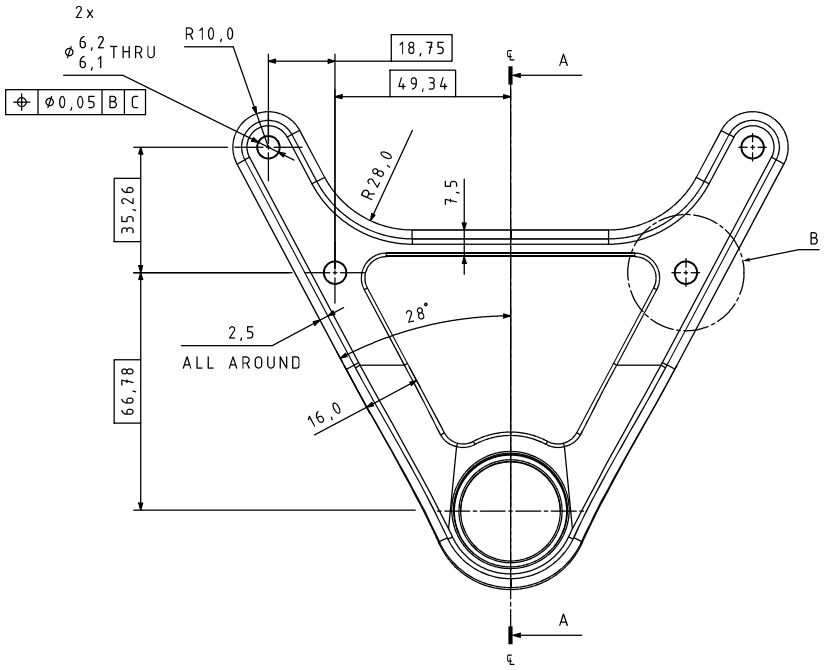

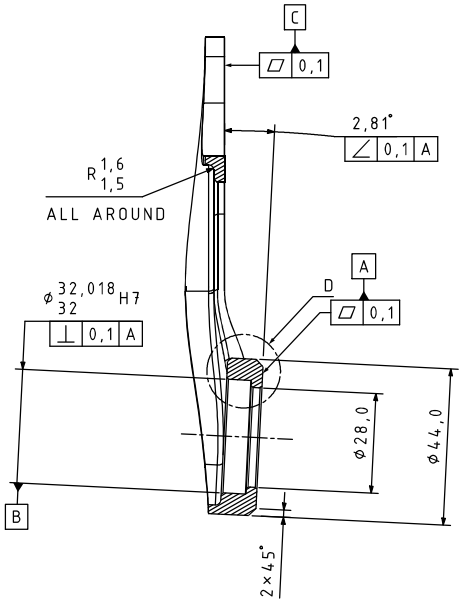

SECTION A-A

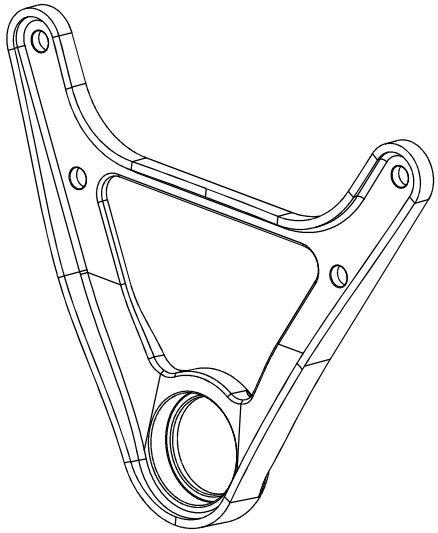

REFERENCE VIEW

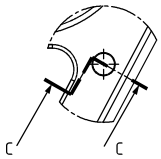

DETAIL B

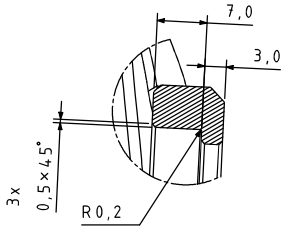

DETAIL D

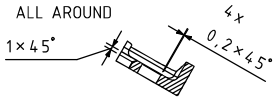

SECTION C-C

NOTES:

1. BREAK ALL SHARP EDGES.
2. PART IS SYMETRICAL ABOUT CENTRE LINE. ℄
3. IMPORTANT TO NOTE THE ANGULARITY BETWEEN DATUM 'A' AND 'C'.
4. ANY UNDIMENSIONED FEATURES REFER TO CAD DATA ⌓ 0,2

UBRacing	MATERIAL CERTIFICATE REQUIRED DIMENSIONS IN MILIMETRES U.O.S	COMPONENT MASS (kg)	0,081	MATERIAL SPEC	ALUMINIUM 7075
				HEAT TREATMENT	N/A
A2	IF IN DOUBT - ASK DO NOT SCALE	DRAWN BY	EPC	SURFACE TREATMENT	ANODIZE
	0 DECIMAL PLACES ±0.50 1 DECIMAL PLACE ±0.25 2 DECIMAL PLACES ±0.10 3 DECIMAL PLACES ±0.02 GENERAL CONCENTRICITY 0.1 TIR ANGULAR TOLERANCE ±0.25° REMOVE BURRS AND SHARP EDGES			DESCRIPTION	RWD STEERING COLUMN BRKT
TEL.	+44 (0)121 414 4218				
E-MAIL.	ubracing@gmail.com				
		SCALE	1:1	SHEET 1/1	PART NUMBER UBR28_ST_302

This drawing and the copyright herein are the property of UBRacing. It is private & confidential and is issued on the express condition that it is not modified,copied or communicated to any other party without the written consent of UBRacing.

REV	DESCRIPTION	INIT	DATE
01A	INITIAL RELEASE	EPC	28/01/2025

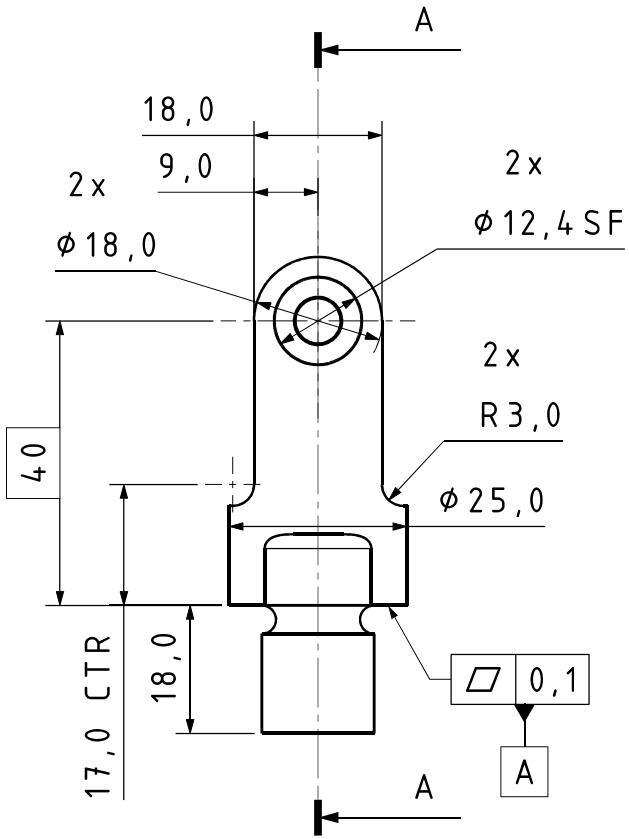

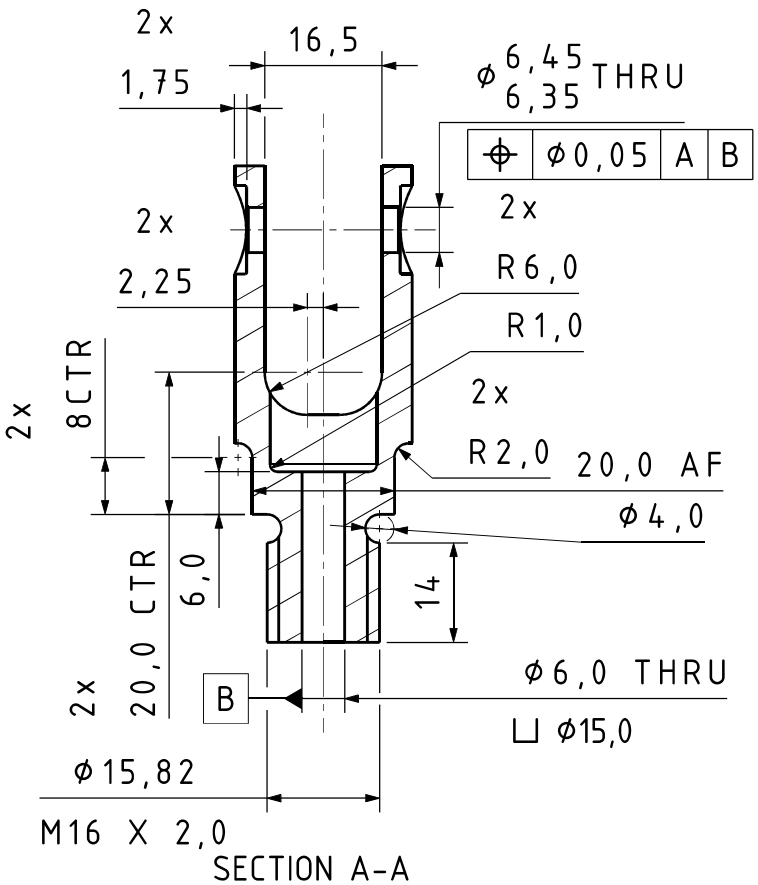

SECTION A-A

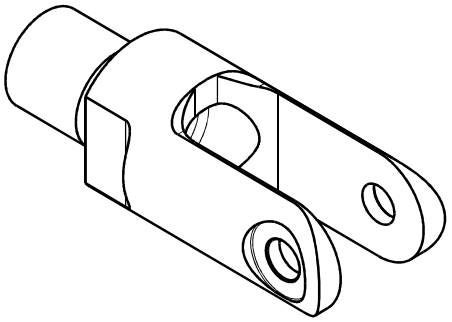

ISOMETRIC VIEW

NOTES:

1. BREAK ALL SHARP EDGES.
2. ALL CO-AXIAL DIAMETERS ◎ ϕ0,05 B
3. 2 OFF PARTS REQUIRED

UBRacing	MATERIAL CERTIFICATE REQUIRED DIMENSIONS IN MILIMETRES U.O.S	COMPONENT MASS (kg)	0,031	MATERIAL SPEC	ALUMINIUM 7075
A4	IF IN DOUBT - ASK DO NOT SCALE	0 DECIMAL PLACES ±0.50 1 DECIMAL PLACE ±0.25 2 DECIMAL PLACES ±0.10 3 DECIMAL PLACES ±0.02 GENERAL CONCENTRICITY 0.1 TIR ANGULAR TOLERANCE ±0.25° REMOVE BURRS AND SHARP EDGES	DRAWN BY EPC	HEAT TREATMENT	N/A
				SURFACE TREATMENT	ANODIZE
TEL.	+44 (0)121 414 4218			DESCRIPTION	STEERING RACK TIER ROD CLEVIS
E-MAIL.	ubracing@gmail.com				
		SCALE	1:1	SHEET 1/1	PART NUMBER UBR28_ST_415

This drawing and the copyright herein are the property of UBRacing. It is private & confidential and is issued on the express condition that it is not modified, copied or communicated to any other party without the written consent of UBRacing.

REV	DESCRIPTION	INIT	DATE
01A	INITIAL RELEASE	EPC	29/01/2025

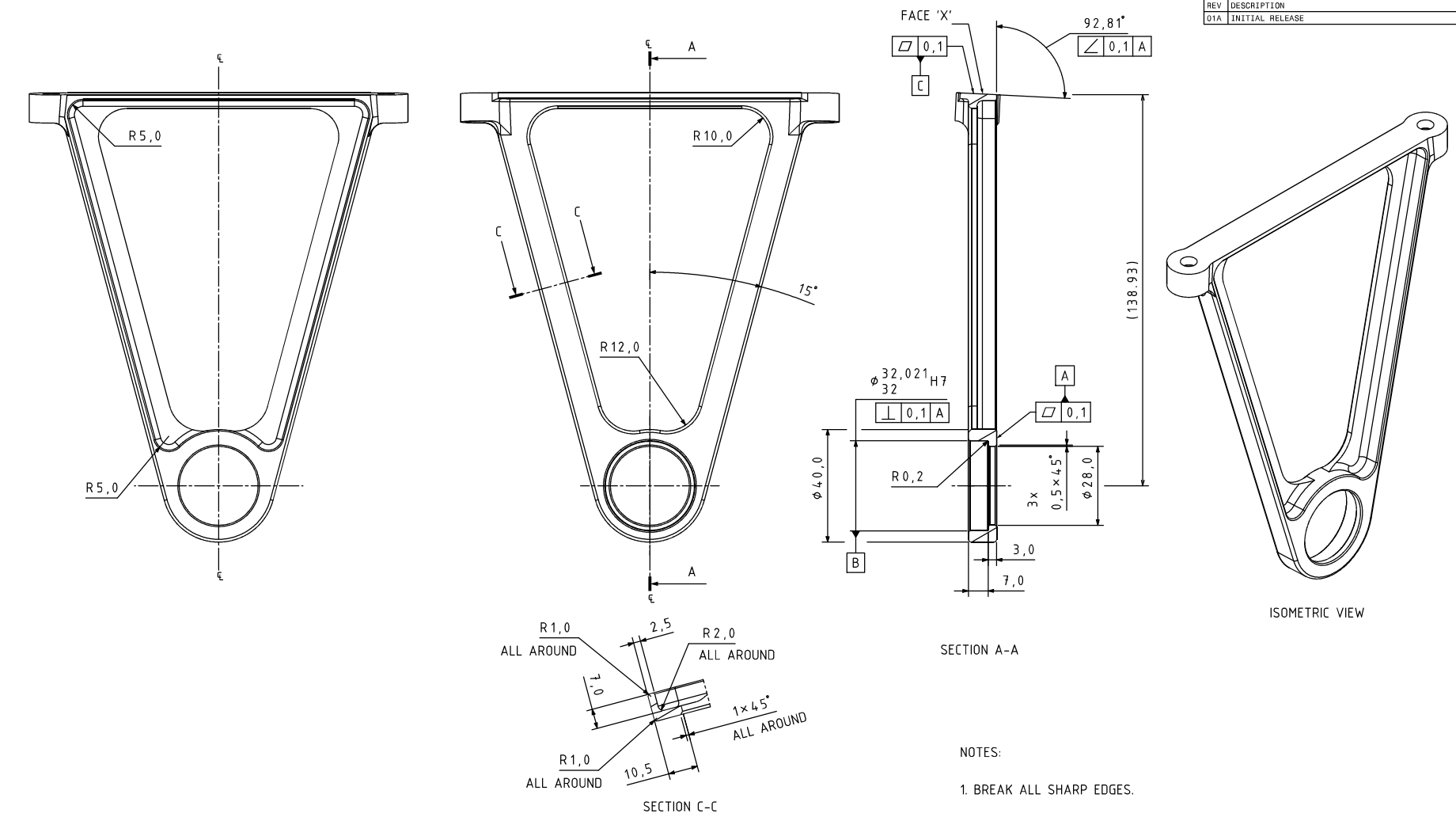

SECTION A-A

ISOMETRIC VIEW

SECTION C-C

SECTION B-B

VIEW ON FACE 'X'

NOTES:

1. BREAK ALL SHARP EDGES.
2. PART IS SYMETRICAL ABOUT CENTRE LINE '℄'
3. ANY UNDIMENSIONED FEATURES REFER TO CAD DATA ⌓ 0,2

UBRacing	MATERIAL CERTIFICATE REQUIRED DIMENSIONS IN MILIMETRES U.O.S	COMPONENT MASS (kg)	0,068	MATERIAL SPEC	ALUMINIUM 7075
				HEAT TREATMENT	N/A
A2	IF IN DOUBT - ASK DO NOT SCALE	DRAWN BY	EPC	SURFACE TREATMENT	ANODIZE
	0 DECIMAL PLACES ±0.50 1 DECIMAL PLACE ±0.25 2 DECIMAL PLACES ±0.10 3 DECIMAL PLACES ±0.02 GENERAL CONCENTRICITY 0.1 TIR ANGULAR TOLERANCE ±0.25° REMOVE BURRS AND SHARP EDGES			DESCRIPTION	FWD STEERING COLUMN BRKT
TEL.	+44 (0)121 414 4218				
E-MAIL.	ubracing@gmail.com				
SCALE	1:1	SHEET	1/1	PART NUMBER	UBR28_ST_502

This drawing and the copyright herein are the property of UBRacing. It is private & confidential and is issued on the express condition that it is not modified,copied or communicated to any other party without the written consent of UBRacing.

REV	DESCRIPTION	INIT	DATE
01A	INITIAL RELEASE	EPC	08/12/2024

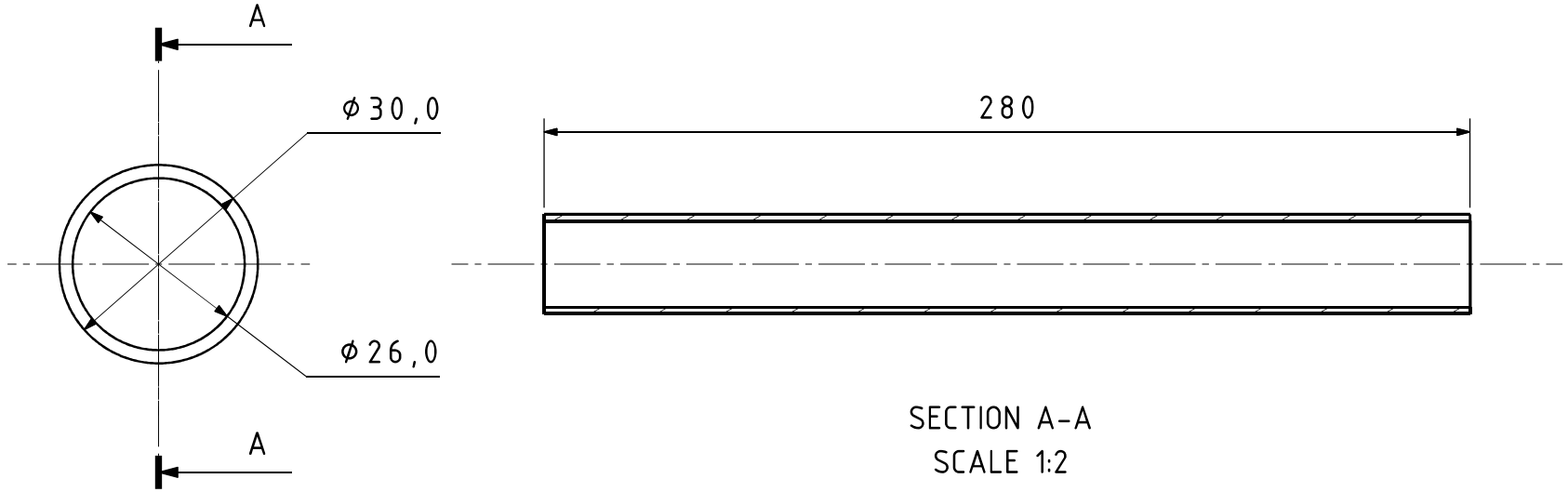

SECTION A-A
SCALE 1:2

UBRacing	MATERIAL CERTIFICATE REQUIRED DIMENSIONS IN MILIMETRES U.O.S	COMPONENT MASS (kg)	N/A	MATERIAL SPEC	ALUMINIUM
				HEAT TREATMENT	N/A
A4	IF IN DOUBT - ASK DO NOT SCALE	DRAWN BY	EPC	SURFACE TREATMENT	N/A
	0 DECIMAL PLACES ±0.50 1 DECIMAL PLACE ±0.25 2 DECIMAL PLACES ±0.10 3 DECIMAL PLACES ±0.02 GENERAL CONCENTRICITY 0.1 TIR ANGULAR TOLERANCE ±0.25° REMOVE BURRS AND SHARP EDGES			DESCRIPTION	COLUMN TUBE MANDREL
TEL.	+44 (0)121 414 4218				
E-MAIL.	ubracing@gmail.com				
		SCALE	1:1	SHEET 1/1	PART NUMBER UBR28_ST_900

This drawing and the copyright herein are the property of UBRacing. It is private & confidential and is issued on the express condition that it is not modified, copied or communicated to any other party without the written consent of UBRacing.

REV	DESCRIPTION	INIT	DATE
01A	INITIAL RELEASE		

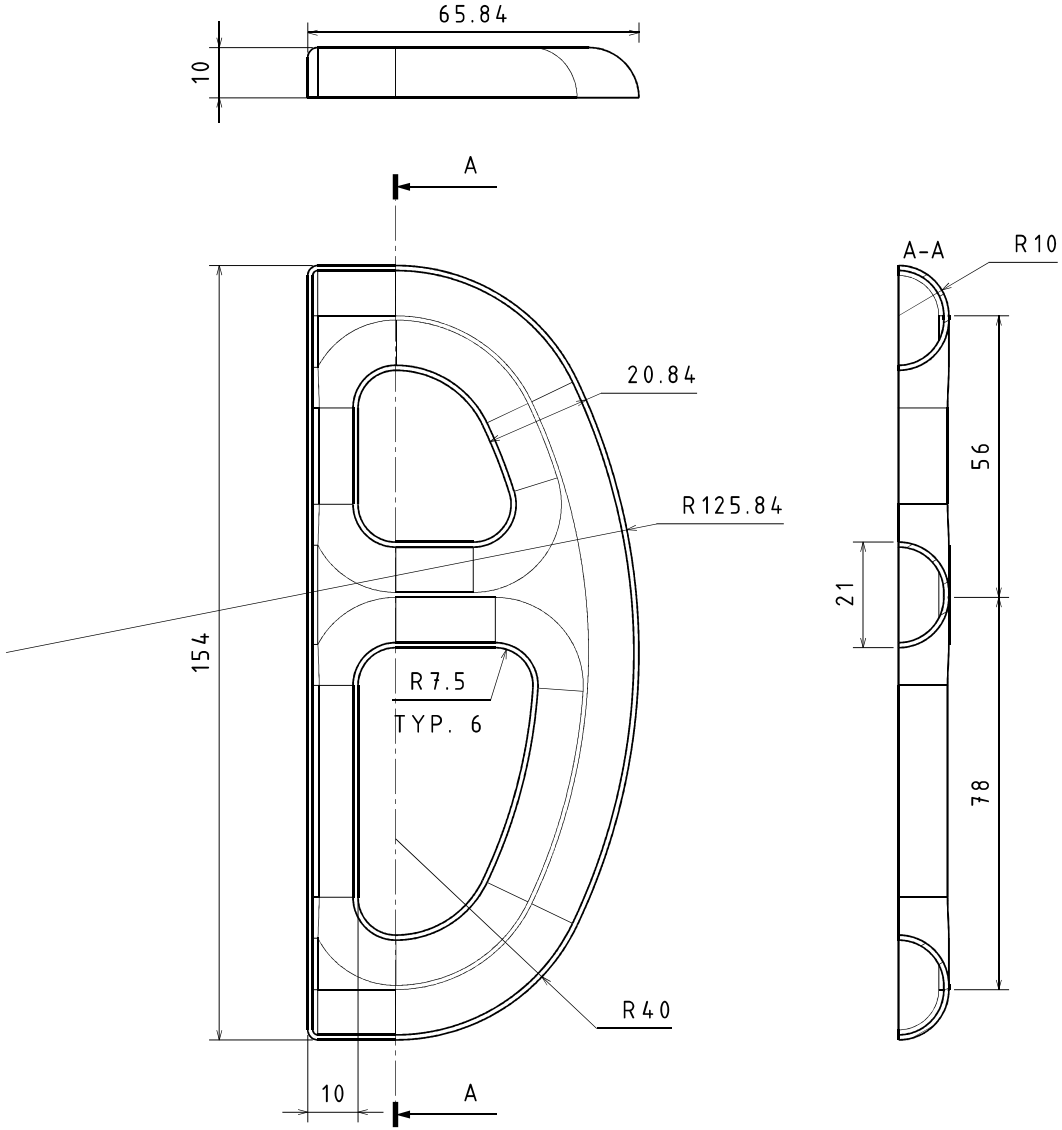

LAMINATE TABLE			
OP NO.	MATERIAL SPECIFICATION	ORIENTATION	POSITION
10	CLEAN AND RELEASE TOOLING		
20	XC110-C331T2-210[1250]	45	1 PLY, ALL OVER
30	DEBULK FOR 30 MINUTES		
40	XC110-C331T2-210[1250]	0/90	1 PLY, ALL OVER
50	XC110-C331T2-210[1250]	0/90	1 PLY, ALL OVER
60	DEBULK FOR 30 MINUTES		
70	XC110-C331T2-210[1250]	45	1 PLY, ALL OVER
80	VACUUM BAG AND CURE: RAMP TO 80C, DWELL FOR 30 MIN, RAMP TO 120C, SOAK FOR 120 MIN, RAMP DOWN		

NOTES
INTERNAL VIEW SHOWN
R-HAND IS MIRRORED
CARBON SHELL THICKNESS 1 MM

UBRacing

A3

IF IN DOUBT - ASK

DO NOT SCALE

TEL. +44 (0)121 414 4218
E-MAIL. ubracing@gmail.com

MATERIAL CERTIFICATE REQUIRED

DIMENSIONS IN MILIMETRES U.O.S

0 DECIMAL PLACES	±0.50
1 DECIMAL PLACE	±0.25
2 DECIMAL PLACES	±0.10
3 DECIMAL PLACES	±0.02
GENERAL CONCENTRICITY	0.1 TIR
ANGULAR TOLERANCE	±0.25°

REMOVE BURRS AND SHARP EDGES

COMPONENT MASS (kg): -

DRAWN BY: KC

MATERIAL SPEC: SEE LAMINATE TABLE

HEAT TREATMENT: N/A

SURFACE TREATMENT: N/A

DESCRIPTION: STEERING WHEEL LEFT SIDE HANDLE

SCALE: 1:1

SHEET: 1/1

PART NUMBER: UBR28_ST_L_102_01A

This drawing and the copyright herein are the property of UBRacing. It is private & confidential and is issued on the express condition that it is not modified,copied or communicated to any other party without the written consent of UBRacing.

REV	DESCRIPTION	INIT	DATE
01A	INITIAL RELEASE		

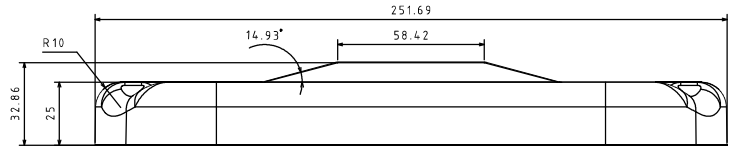

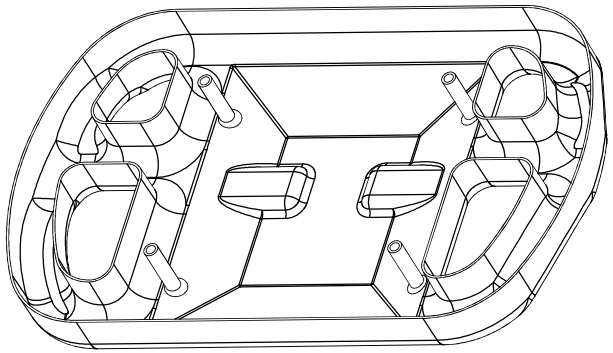

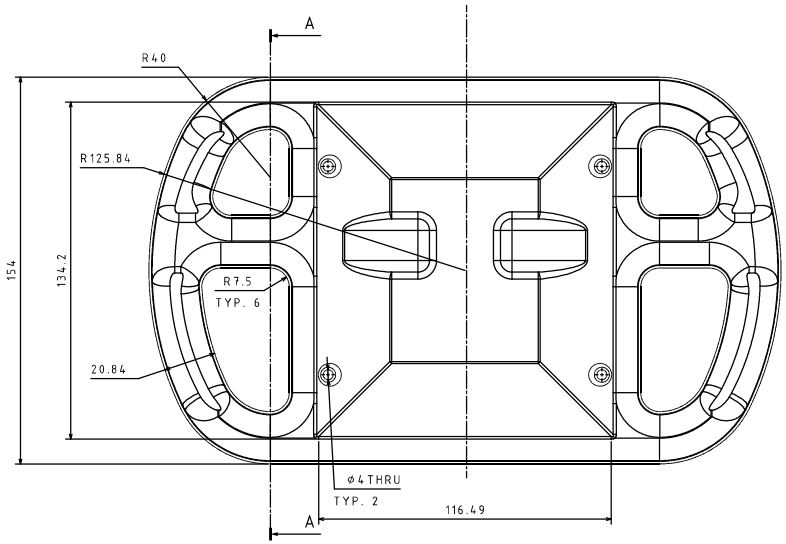

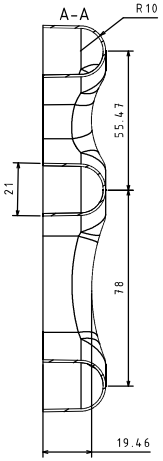

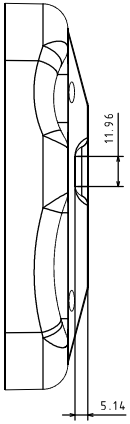

LAMINATE TABLE			
OP NO.	MATERIAL SPECIFICATION	ORIENTATION	POSITION
10	CLEAN AND RELEASE TOOLING		
20	XC110-C331T2-210[1250]	45	1 PLY, ALL OVER
30	DEBULK FOR 30 MINUTES		
40	XC110-C331T2-210[1250]	0/90	1 PLY, ALL OVER
50	XC110-C331T2-210[1250]	0/90	1 PLY, ALL OVER
60	DEBULK FOR 30 MINUTES		
70	XC110-C331T2-210[1250]	45	1 PLY, ALL OVER
80	VACUUM BAG AND CURE: RAMP TO 80C, DWELL FOR 30 MIN, RAMP TO 120C, SOAK FOR 120 MIN, RAMP DOWN		

NOTES:
PART SYMMETRICAL ABOUT CENTRE LINE
HOLLOW PART
CARBON SHELL THICKNESS 1 MM
INTERNAL VIEW SHOWN

UBRacing

A1

IF IN DOUBT - ASK

DO NOT SCALE

TEL. +44 (0)121 414 4218

E-MAIL. ubracing@gmail.com

MATERIAL CERTIFICATE REQUIRED

DIMENSIONS IN MILIMETRES U.O.S

0 DECIMAL PLACES	±0.50
1 DECIMAL PLACE	±0.25
2 DECIMAL PLACES	±0.10
3 DECIMAL PLACES	±0.02
GENERAL CONCENTRICITY	0.1 TIR
ANGULAR TOLERANCE	±0.25°

REMOVE BURRS AND SHARP EDGES

This drawing and the copyright herein are the property of UBRacing. It is private & confidential and is issued on the express condition that it is not modified, copied or communicated to any other party without the written consent of UBRacing.

COMPONENT MASS (kg)	-
DRAWN BY	KC
SCALE	1:1
MATERIAL SPEC	SEE LAMINATE TABLE
HEAT TREATMENT	N/A
SURFACE TREATMENT	N/A
DESCRIPTION	STEERING WHEEL BACK
SHEET	1/1
PART NUMBER	UBR28_ST_N_101_01A

REV	DESCRIPTION	INIT	DATE
01A	INITIAL RELEASE		

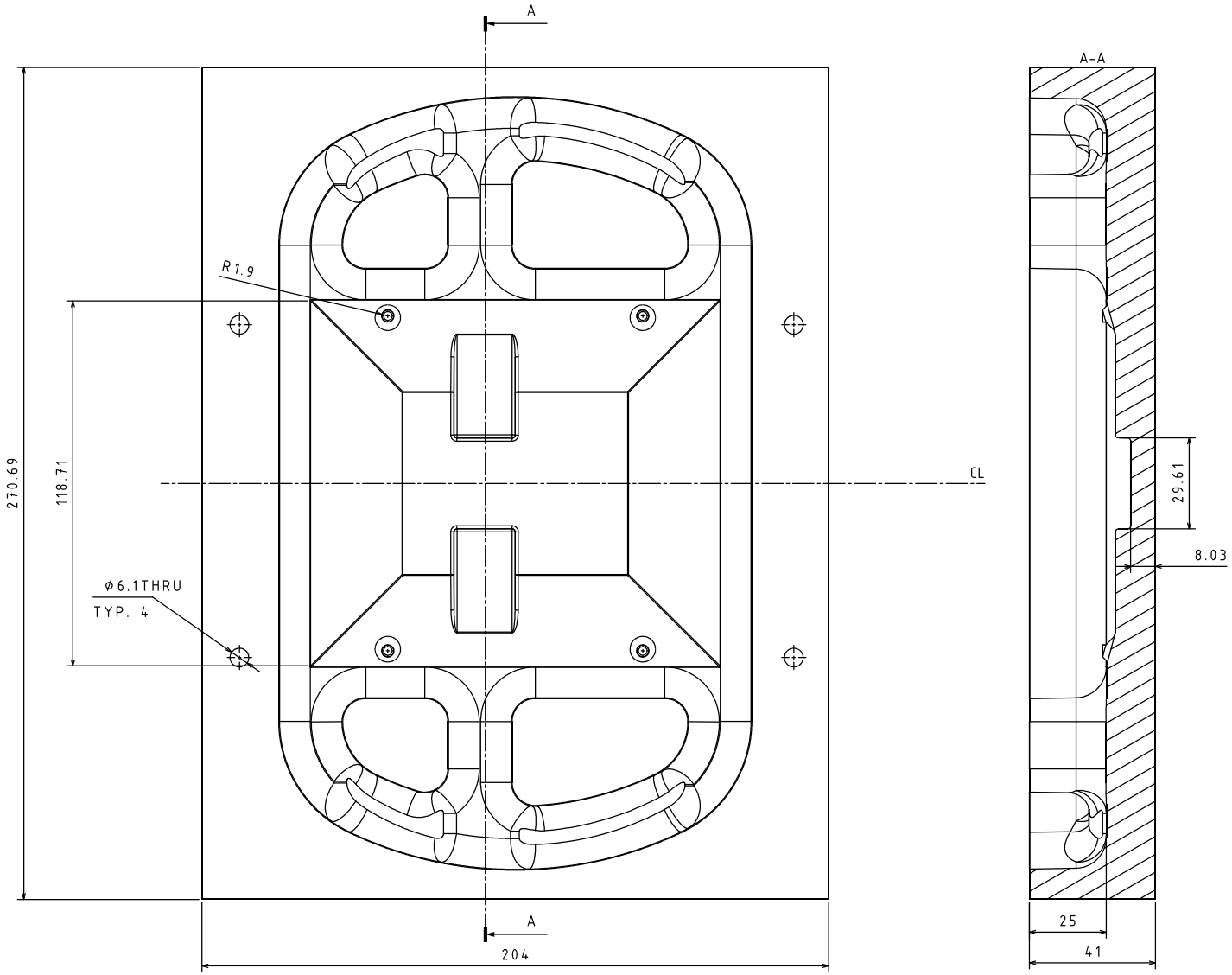

NOTES
MACHINE TO CAD
INTERNAL SURFACE Ra 0.4
SYMMETRICAL ABOUT CENTRE LINE (CL)

UBRacing	MATERIAL CERTIFICATE REQUIRED DIMENSIONS IN MILIMETRES U.O.S	COMPONENT MASS (kg)	-	MATERIAL SPEC	ALUMINIUM
				HEAT TREATMENT	N/A
A2	IF IN DOUBT - ASK DO NOT SCALE	DRAWN BY	KC	SURFACE TREATMENT	N/A
	0 DECIMAL PLACES ±0.50 1 DECIMAL PLACE ±0.25 2 DECIMAL PLACES ±0.10 3 DECIMAL PLACES ±0.02 GENERAL CONCENTRICITY 0.1 TIR ANGULAR TOLERANCE ±0.25° REMOVE BURRS AND SHARP EDGES			DESCRIPTION	STEERING WHEEL BACKPLATE MOULD
TEL.	+44 (0)121 414 4218				
E-MAIL.	ubracing@gmail.com				
This drawing and the copyright herein are the property of UBRacing. It is private & confidential and is issued on the express condition that it is not modified,copied or communicated to any other party without the written consent of UBRacing.		SCALE	1:1	SHEET 1/1	PART NUMBER UBR28_ST_N_101_01A

REV	DESCRIPTION	INIT	DATE
01A	INITIAL RELEASE		

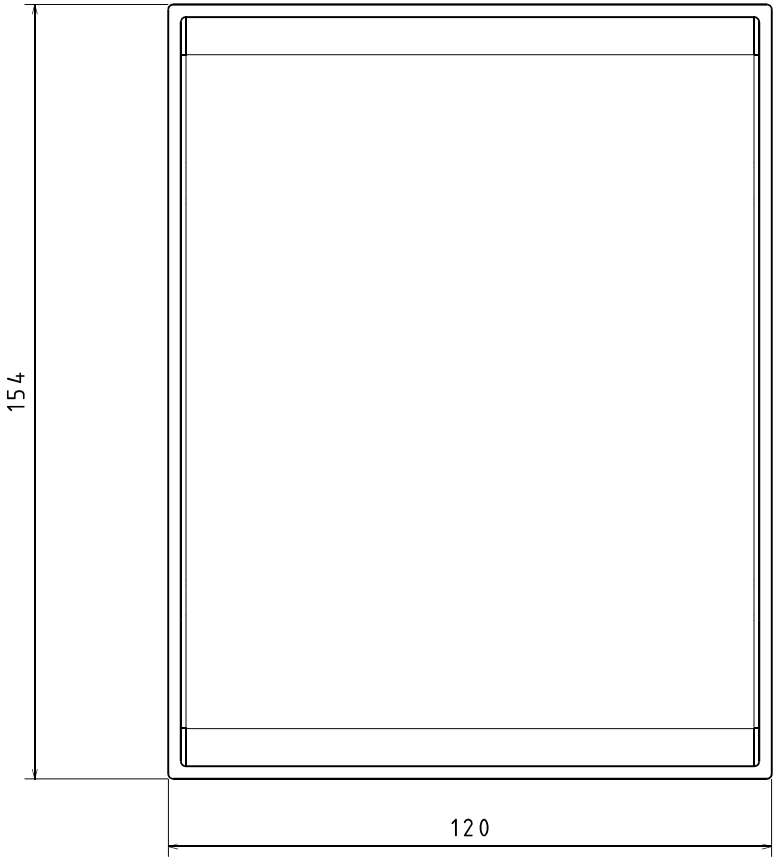

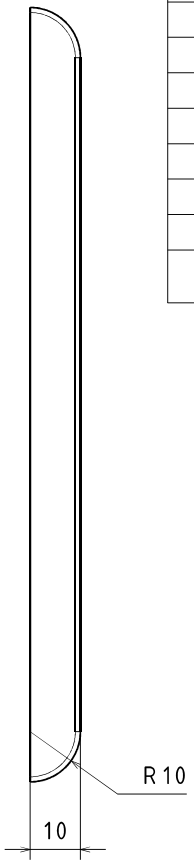

LAMINATE TABLE			
OP NO.	MATERIAL SPECIFICATION	ORIENTATION	POSITION
10	CLEAN AND RELEASE TOOLING		
20	XC110-C331T2-210[1250]	45	1 PLY, ALL OVER
30	DEBULK FOR 30 MINUTES		
40	XC110-C331T2-210[1250]	0/90	1 PLY, ALL OVER
50	XC110-C331T2-210[1250]	0/90	1 PLY, ALL OVER
60	DEBULK FOR 30 MINUTES		
70	XC110-C331T2-210[1250]	45	1 PLY, ALL OVER
80	VACUUM BAG AND CURE: RAMP TO 80C, DWELL FOR 30 MIN, RAMP TO 120C, SOAK FOR 120 MIN, RAMP DOWN		

NOTES
INTERNAL VIEW SHOWN
CARBON SHELL THICKNESS 1 MM

UBRacing

A3

IF IN DOUBT - ASK

DO NOT SCALE

TEL. +44 (0)121 414 4218
E-MAIL. ubracing@gmail.com

MATERIAL CERTIFICATE REQUIRED

DIMENSIONS IN MILIMETRES U.O.S

0 DECIMAL PLACES	±0.50
1 DECIMAL PLACE	±0.25
2 DECIMAL PLACES	±0.10
3 DECIMAL PLACES	±0.02
GENERAL CONCENTRICITY	0.1 TIR
ANGULAR TOLERANCE	±0.25°

REMOVE BURRS AND SHARP EDGES

COMPONENT MASS (kg): -

DRAWN BY: KC

MATERIAL SPEC: SEE LAMINATE TABLE

HEAT TREATMENT: N/A

SURFACE TREATMENT: N/A

DESCRIPTION: STEERING WHEEL FRONT PLATE

SCALE: 1:1

SHEET: 1/1

PART NUMBER: UBR28_ST_N_103_01A

This drawing and the copyright herein are the property of UBRacing. It is private & confidential and is issued on the express condition that it is not modified,copied or communicated to any other party without the written consent of UBRacing.

REV	DESCRIPTION	INIT	DATE
01A	INITIAL RELEASE		

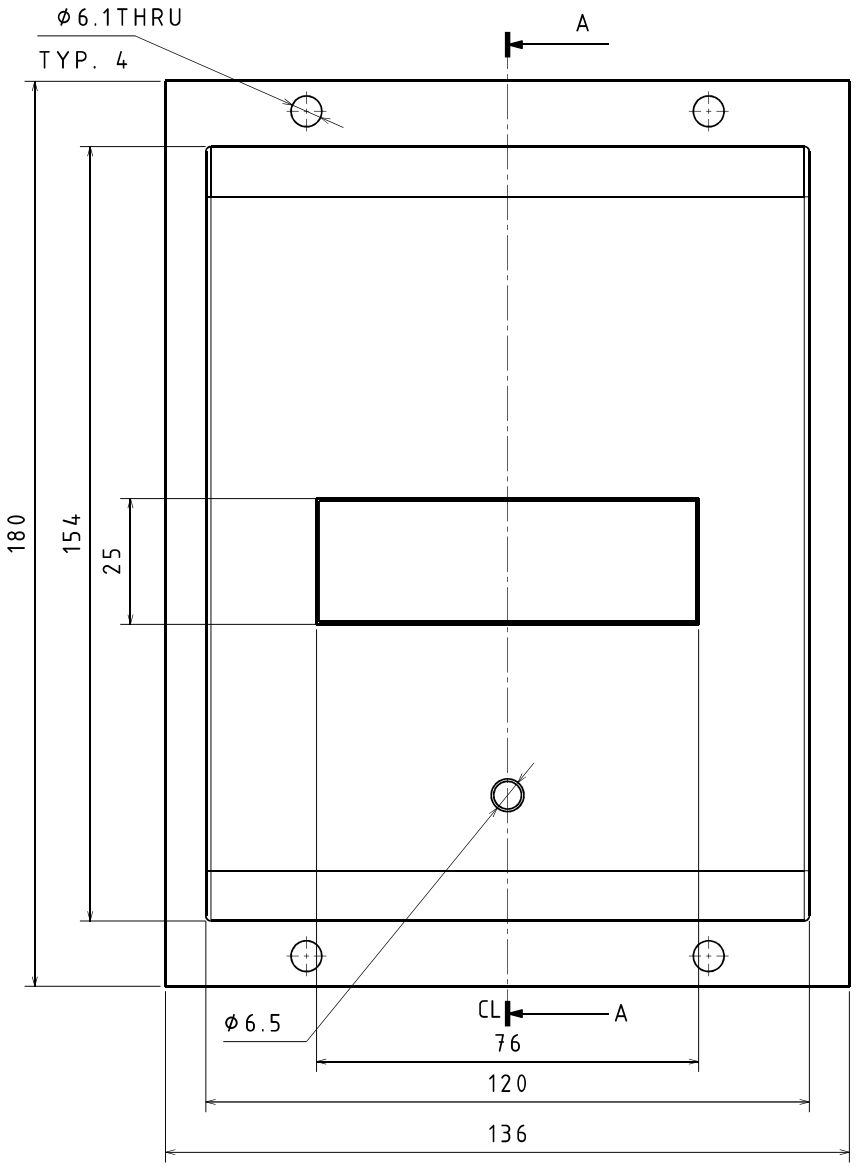

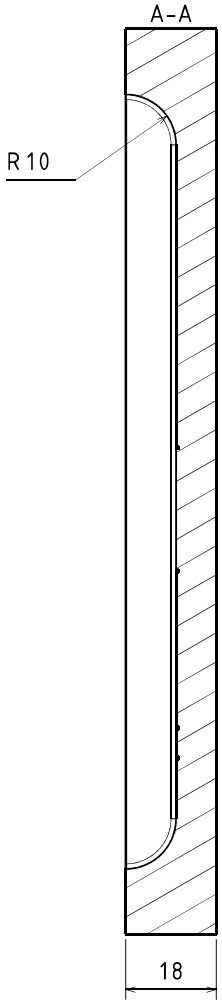

NOTES
MACHINE TO CAD
INTERNAL SURFACE Ra 0.4
RECESSES 0.5 MM
PART SYMMETRICAL ABOUT CENTRE LINE (CL)

UBRacing

A3

IF IN DOUBT - ASK

DO NOT SCALE

TEL. +44 (0)121 414 4218
E-MAIL. ubracing@gmail.com

MATERIAL CERTIFICATE REQUIRED

DIMENSIONS IN MILIMETRES U.O.S

0 DECIMAL PLACES	±0.50
1 DECIMAL PLACE	±0.25
2 DECIMAL PLACES	±0.10
3 DECIMAL PLACES	±0.02
GENERAL CONCENTRICITY	0.1 TIR
ANGULAR TOLERANCE	±0.25°

REMOVE BURRS AND SHARP EDGES

COMPONENT MASS (kg): -

DRAWN BY: KC

MATERIAL SPEC: ALUMINIUM
HEAT TREATMENT: N/A
SURFACE TREATMENT: N/A

DESCRIPTION: STEERING WHEEL FRONT PLATE MOULD

SCALE: 1:1

SHEET 1/1

PART NUMBER: UBR28_ST_N_103M_01A

This drawing and the copyright herein are the property of UBRacing. It is private & confidential and is issued on the express condition that it is not modified,copied or communicated to any other party without the written consent of UBRacing.

REV	DESCRIPTION	INIT	DATE
01A	INITIAL RELEASE		

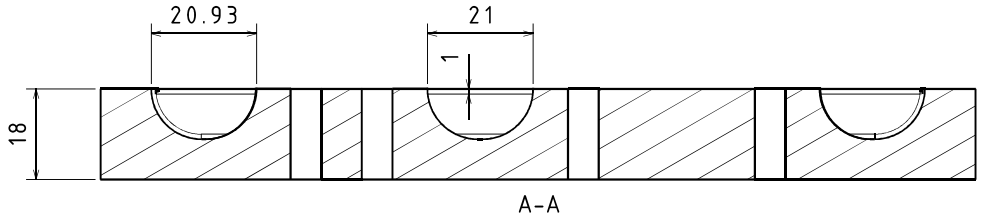

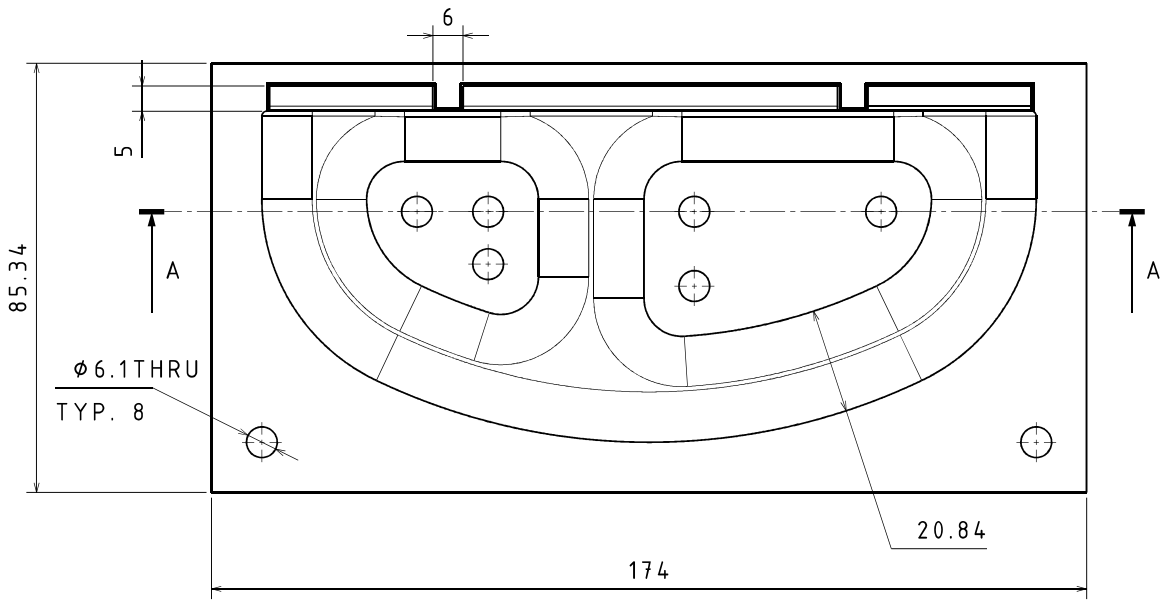

EXTRUDES VIEW

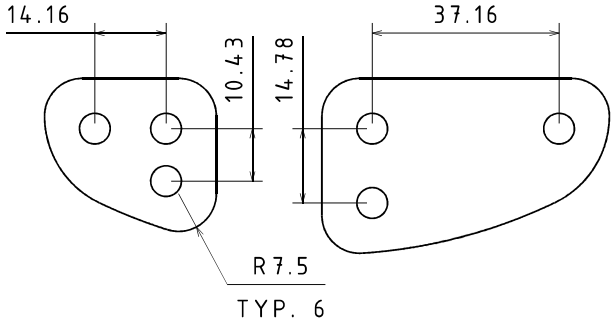

NOTES
MACHINE TO CAD
INTERNAL SURFACE Ra 0.4
R HAND MIRRORED

UBRacing	MATERIAL CERTIFICATE REQUIRED DIMENSIONS IN MILIMETRES U.O.S	COMPONENT MASS (kg)	-	MATERIAL SPEC	ALUMINIUM
				HEAT TREATMENT	N/A
A3	IF IN DOUBT - ASK DO NOT SCALE	DRAWN BY	KC	SURFACE TREATMENT	N/A
	0 DECIMAL PLACES ±0.50 1 DECIMAL PLACE ±0.25 2 DECIMAL PLACES ±0.10 3 DECIMAL PLACES ±0.02 GENERAL CONCENTRICITY 0.1 TIR ANGULAR TOLERANCE ±0.25° REMOVE BURRS AND SHARP EDGES			DESCRIPTION	STEERING WHEEL HANDLE MOULD R
TEL.	+44 (0)121 414 4218				
E-MAIL.	ubracing@gmail.com				
This drawing and the copyright herein are the property of UBRacing. It is private & confidential and is issued on the express condition that it is not modified,copied or communicated to any other party without the written consent of UBRacing.		SCALE	1:1	SHEET 1/1	PART NUMBER UBR28_ST_R_102M_01A

REV	DESCRIPTION	INIT	DATE
01A	INITIAL RELEASE	EPC	11/01/2025

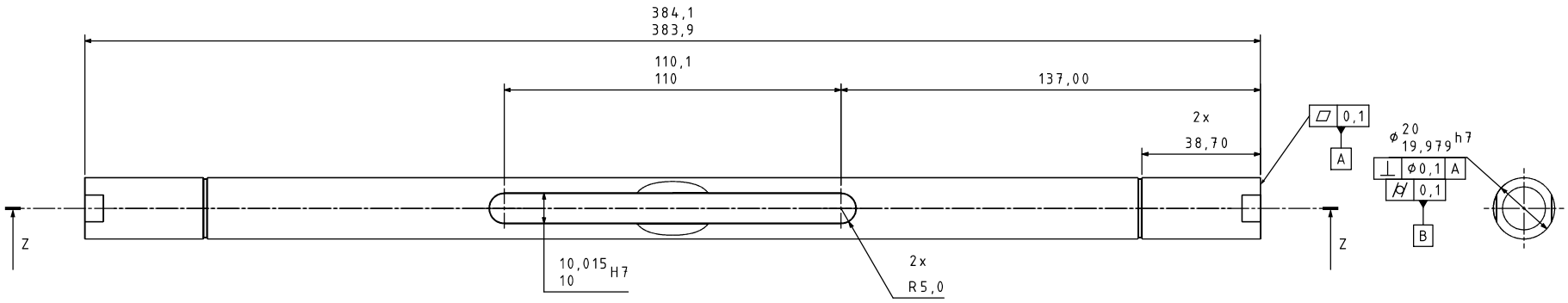

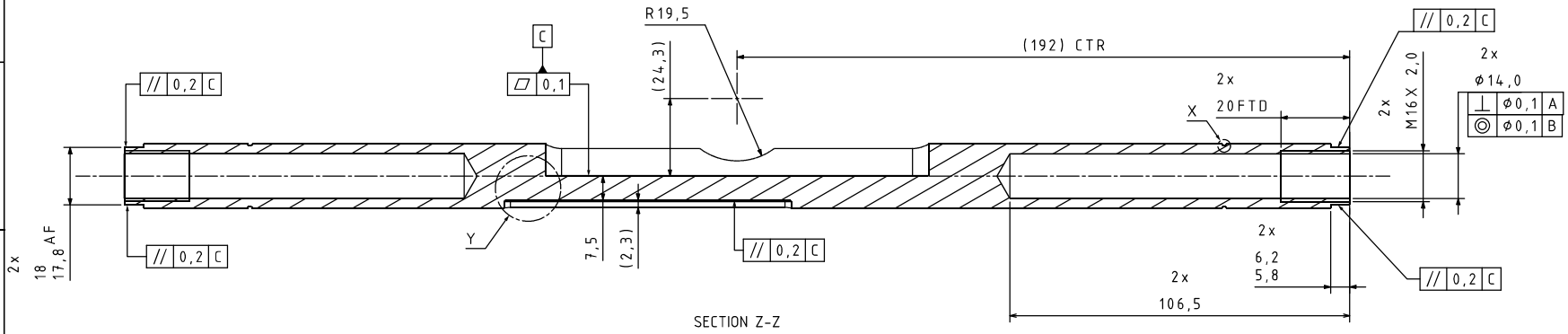

SECTION Z-Z

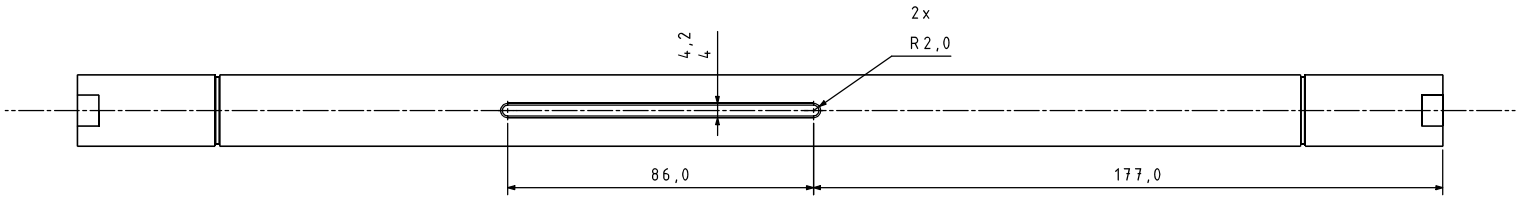

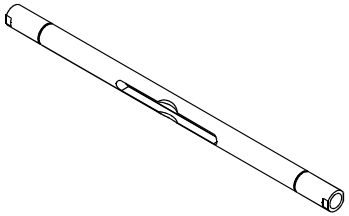

ISOMETRIC VIEW
SCALE 1:2

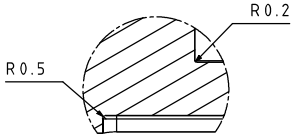

DETAIL Y
SCALE 2:1

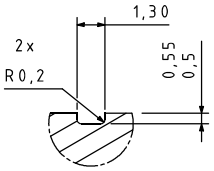

2x CIRCLIP GROOVE
DETAIL X
SCALE 6:1

NOTES:

1. THREAD, CIRCLIP GROOVE AND MASS SAVING POCKET SYMMETRIC ABOUT CENTRE.
2. BREAK ALL SHARP EDGES.
3. ANY UNDIMENSIONED FEATURES REFER TO CAD.

UBRacing	MATERIAL CERTIFICATE REQUIRED DIMENSIONS IN MILIMETRES U.O.S	COMPONENT MASS (kg)	0,208	MATERIAL SPEC	ALUMINIUM 7075
				HEAT TREATMENT	N/A
A2	IF IN DOUBT - ASK DO NOT SCALE	DRAWN BY	EPC	SURFACE TREATMENT	IGUS AWMP-20
				DESCRIPTION	STEERING RACK SHAFT
TEL.	+44 (0)121 414 4218				
E-MAIL.	ubracing@gmail.com				
	0 DECIMAL PLACES ±0.50 1 DECIMAL PLACE ±0.25 2 DECIMAL PLACES ±0.10 3 DECIMAL PLACES ±0.02 GENERAL CONCENTRICITY 0.1 TIR ANGULAR TOLERANCE ±0.25° REMOVE BURRS AND SHARP EDGES	SCALE	1:1	SHEET 1/1	PART NUMBER UBR28_ST_N_401

This drawing and the copyright herein are the property of UBRacing. It is private & confidential and is issued on the express condition that it is not modified,copied or communicated to any other party without the written consent of UBRacing.

REV	DESCRIPTION	INIT	DATE
01A	INITIAL RELEASE	EPC	11/01/2024

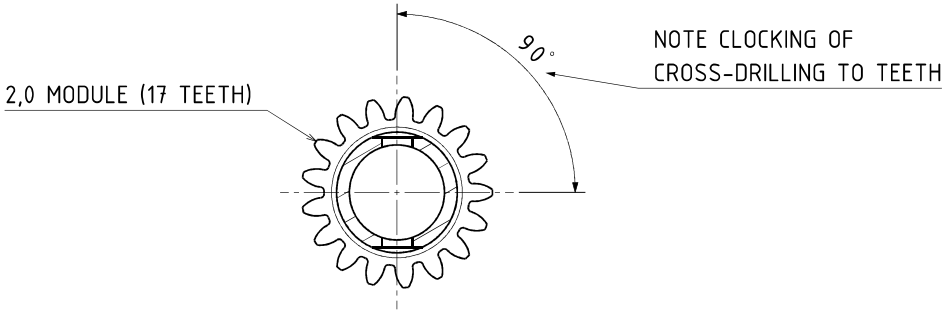

SECTION B-B

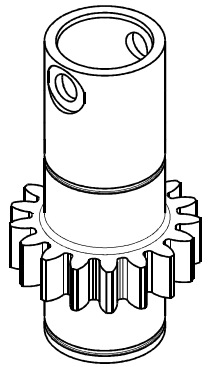

ISOMETRIC VIEW

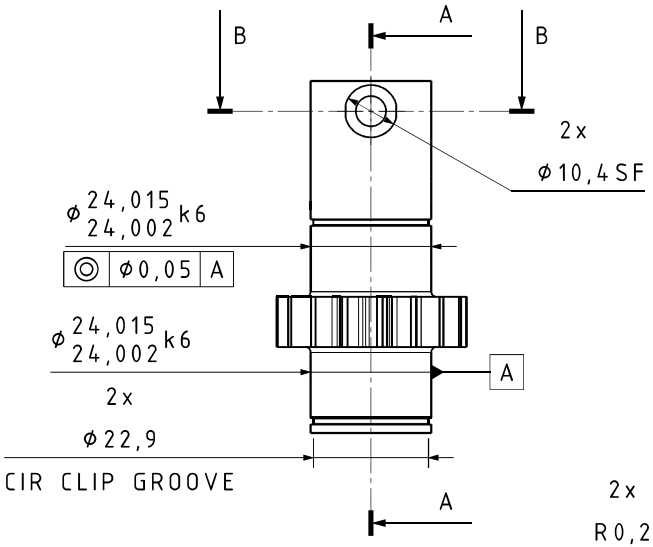

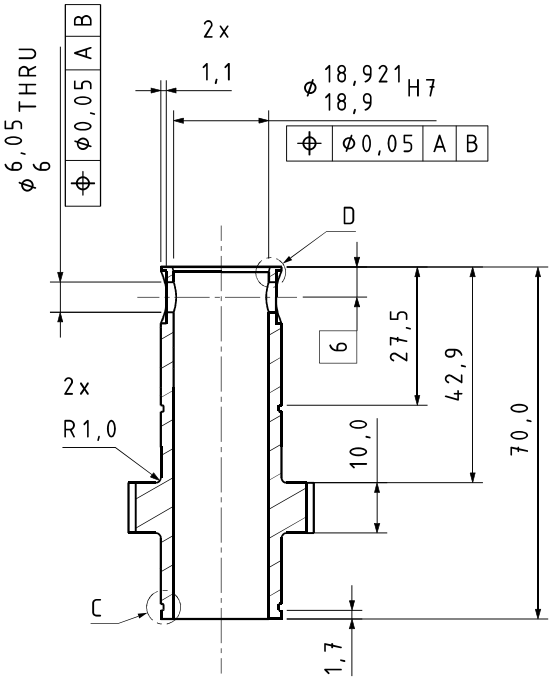

SECTION A-A

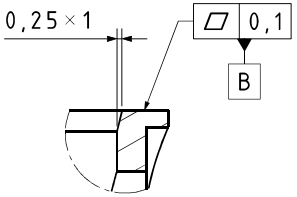

DETAIL D
SCALE 4:1

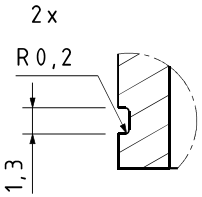

2x
DETAIL C
SCALE 4:1

NOTES:

1. BREAK ALL SHARP EDGES

2. IMPORTANT NOTE CLOCKING OF CROSS-DRILLING IN RELATION TO GEAR TOOTH

3. PART MESHES WITH UBR28_ST_N_403

UBRacing	MATERIAL CERTIFICATE REQUIRED DIMENSIONS IN MILIMETRES U.O.S	COMPONENT MASS (kg)	0,124	MATERIAL SPEC	STEEL 817M40T
				HEAT TREATMENT	N/A
A3	IF IN DOUBT - ASK DO NOT SCALE	DRAWN BY	EPC	SURFACE TREATMENT	N/A
	0 DECIMAL PLACES ±0.50 1 DECIMAL PLACE ±0.25 2 DECIMAL PLACES ±0.10 3 DECIMAL PLACES ±0.02 GENERAL CONCENTRICITY 0.1 TIR ANGULAR TOLERANCE ±0.25° REMOVE BURRS AND SHARP EDGES			DESCRIPTION	PINION STEERING RACK GEAR
TEL.	+44 (0)121 414 4218				
E-MAIL.	ubracing@gmail.com				
This drawing and the copyright herein are the property of UBRacing. It is private & confidential and is issued on the express condition that it is not modified,copied or communicated to any other party without the written consent of UBRacing.		SCALE	1:1	SHEET 1/1	PART NUMBER UBR28_ST_N_402

REV	DESCRIPTION	INIT	DATE
01A	INITIAL RELEASE	EPC	11/01/2025

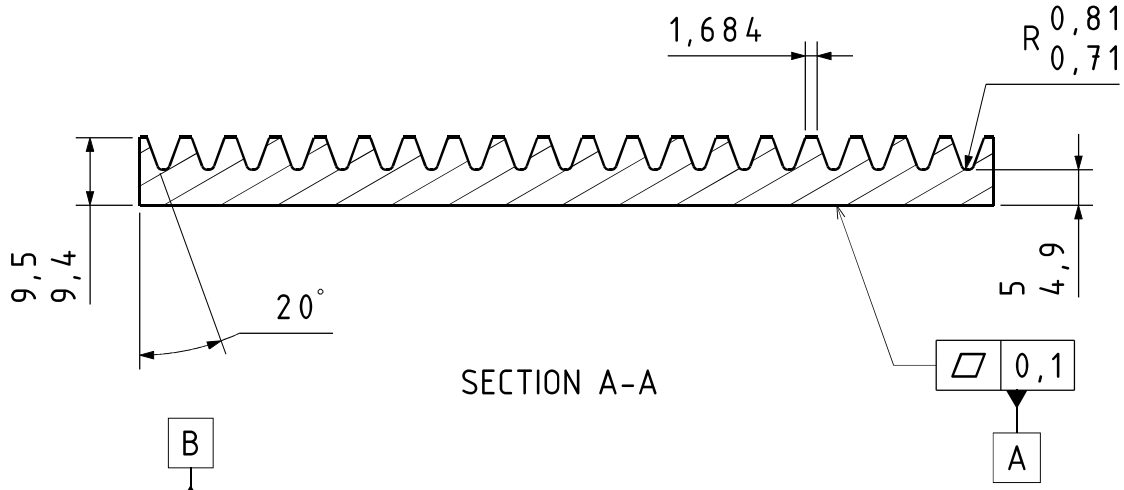

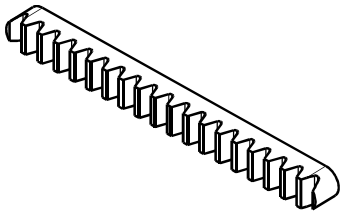

REFERENCE VIEW
SCALE 1:2

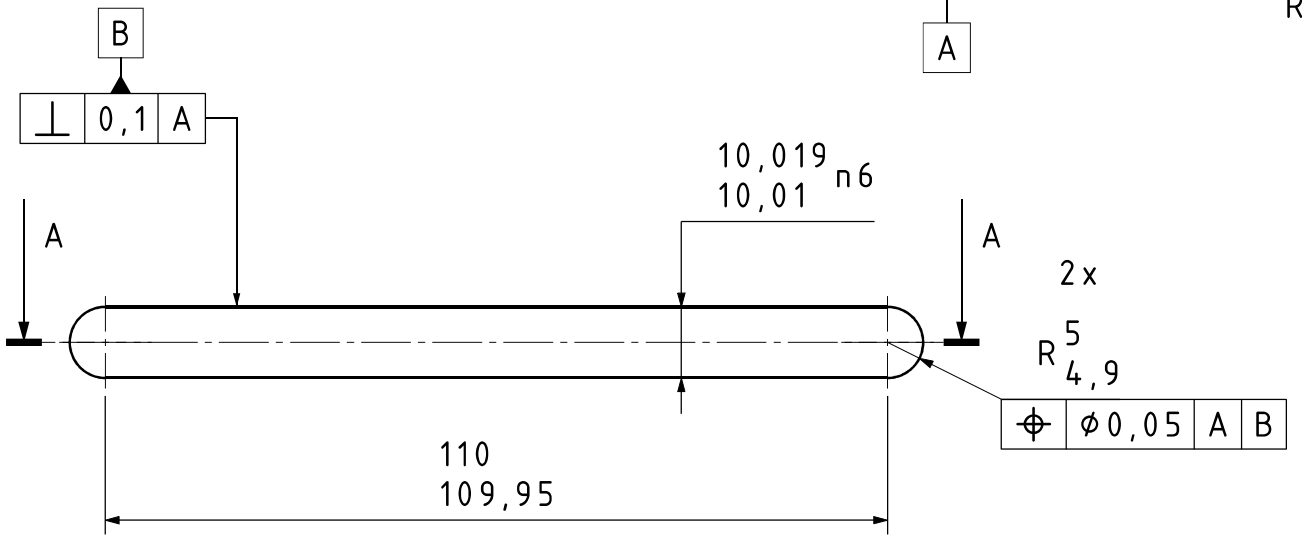

NOTES:

1. BREAK ALL SHARP EDGES.
2. PART MESHES WITH UBR28_ST_N_402.
3. ANY UNDIMENSIONED FEATURES REFER TO CAD DATA.

UBRacing	MATERIAL CERTIFICATE REQUIRED DIMENSIONS IN MILIMETRES U.O.S	COMPONENT MASS (kg)	0,068	MATERIAL SPEC	EN24T STEEL
				HEAT TREATMENT	N/A
A4	IF IN DOUBT - ASK DO NOT SCALE	DRAWN BY	EPC	SURFACE TREATMENT	N/A
	0 DECIMAL PLACES ±0.50 1 DECIMAL PLACE ±0.25 2 DECIMAL PLACES ±0.10 3 DECIMAL PLACES ±0.02 GENERAL CONCENTRICITY 0.1 TIR ANGULAR TOLERANCE ±0.25° REMOVE BURRS AND SHARP EDGES			DESCRIPTION	STEERING RACK TOOTHED INSERT
TEL.	+44 (0)121 414 4218				
E-MAIL.	ubracing@gmail.com				
	This drawing and the copyright herein are the property of UBRacing. It is private & confidential and is issued on the express condition that it is not modified, copied or communicated to any other party without the written consent of UBRacing.	SCALE	1:1	SHEET 1/1	PART NUMBER UBR28_ST_N_403

REV	DESCRIPTION	INIT	DATE
01A	INITIAL RELEASE	EPC	13/01/2025

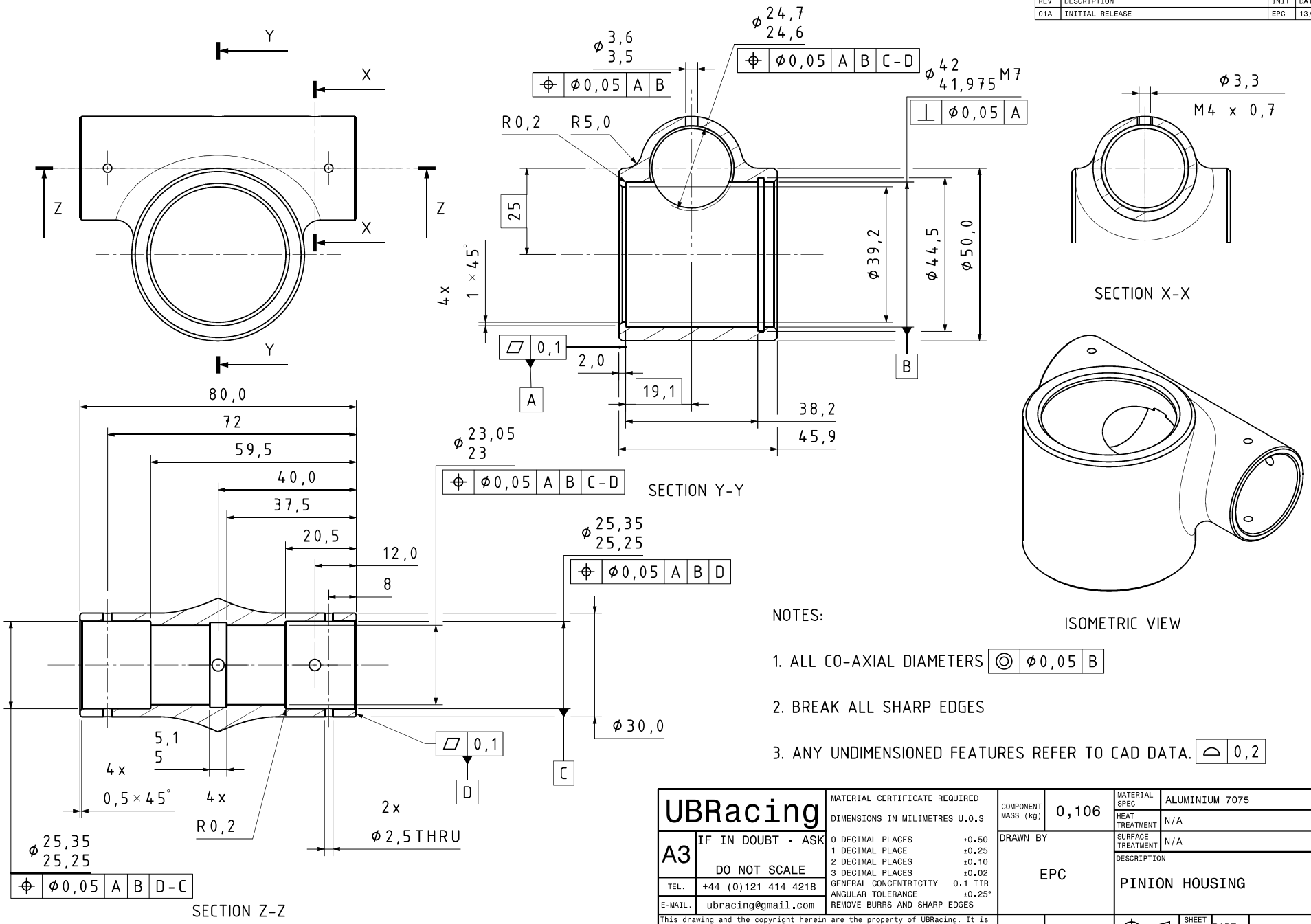

NOTES:

1. ALL CO-AXIAL DIAMETERS ◎ ϕ0,05 B
2. BREAK ALL SHARP EDGES
3. ANY UNDIMENSIONED FEATURES REFER TO CAD DATA. ⌓ 0,2

UBRacing	MATERIAL CERTIFICATE REQUIRED DIMENSIONS IN MILIMETRES U.O.S	COMPONENT MASS (kg)	0,106
A3	IF IN DOUBT - ASK DO NOT SCALE	DRAWN BY	EPC
TEL.	+44 (0)121 414 4218		
E-MAIL.	ubracing@gmail.com		

0 DECIMAL PLACES	±0.50
1 DECIMAL PLACE	±0.25
2 DECIMAL PLACES	±0.10
3 DECIMAL PLACES	±0.02
GENERAL CONCENTRICITY	0.1 TIR
ANGULAR TOLERANCE	±0.25°
REMOVE BURRS AND SHARP EDGES	

MATERIAL SPEC	ALUMINIUM 7075
HEAT TREATMENT	N/A
SURFACE TREATMENT	N/A
DESCRIPTION	PINION HOUSING
SCALE	1:1
SHEET	1/1
PART NUMBER	UBR28_ST_N_404

This drawing and the copyright herein are the property of UBRacing. It is private & confidential and is issued on the express condition that it is not modified,copied or communicated to any other party without the written consent of UBRacing.

REV	DESCRIPTION	INIT	DATE
01A	INITIAL RELEASE	PL	10/02/2025

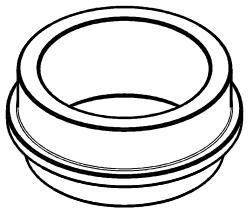

REFERENCE VIEW

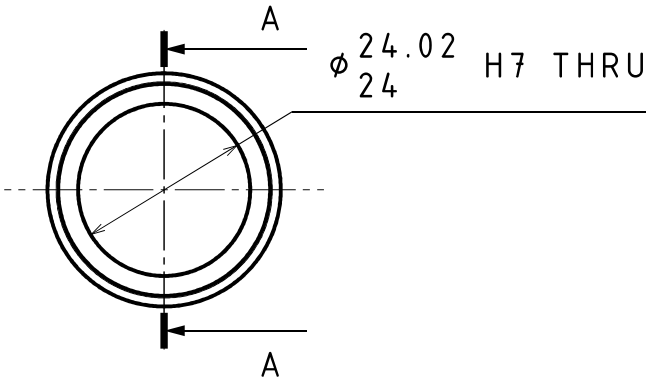

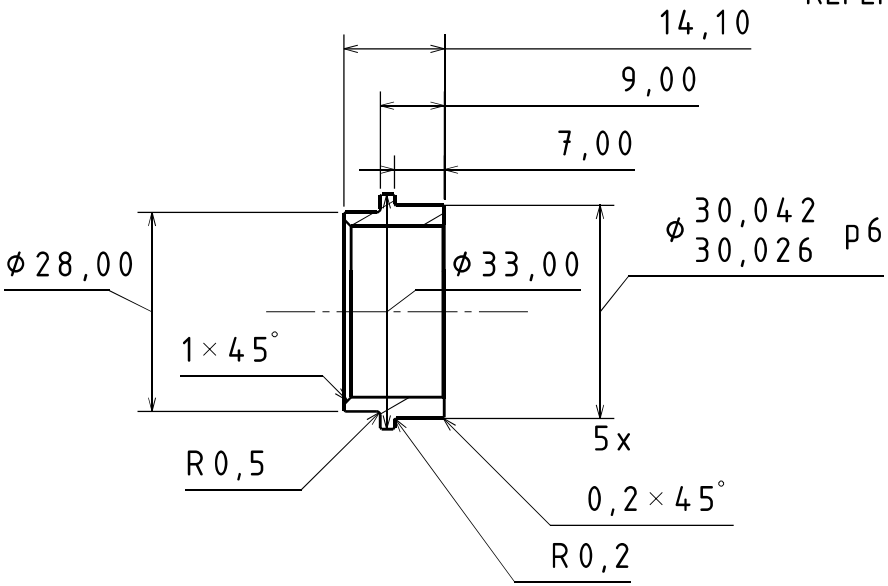

SECTION A-A

NOTES:

1. BREAK ALL SHARP EDGES
2. TEST FIT ONTO COMPONENTS PROVIDED
3. 2 OFF PARTS REQUIRED

UBRacing	MATERIAL CERTIFICATE REQUIRED DIMENSIONS IN MILIMETRES U.O.S	COMPONENT MASS (kg)	0.009	MATERIAL SPEC	ALUMINIUM 6082
				HEAT TREATMENT	N/A
A4	IF IN DOUBT - ASK DO NOT SCALE	DRAWN BY	PL	SURFACE TREATMENT	N/A
	0 DECIMAL PLACES ±0.50 1 DECIMAL PLACE ±0.25 2 DECIMAL PLACES ±0.10 3 DECIMAL PLACES ±0.02 GENERAL CONCENTRICITY 0.1 TIR ANGULAR TOLERANCE ±0.25°			DESCRIPTION	PINION SPACER
TEL.	+44 (0)121 414 4218				
E-MAIL.	ubracing@gmail.com				
	REMOVE BURRS AND SHARP EDGES				
	This drawing and the copyright herein are the property of UBRacing. It is private & confidential and is issued on the express condition that it is not modified, copied or communicated to any other party without the written consent of UBRacing.	SCALE	1:1	SHEET 1/1	PART NUMBER UBR28_ST_N_405

REV	DESCRIPTION	INIT	DATE
01A	INITIAL RELEASE	EPC	28/01/2025

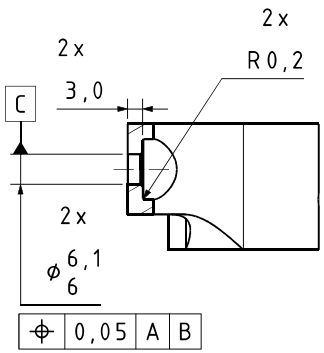

SECTION B-B

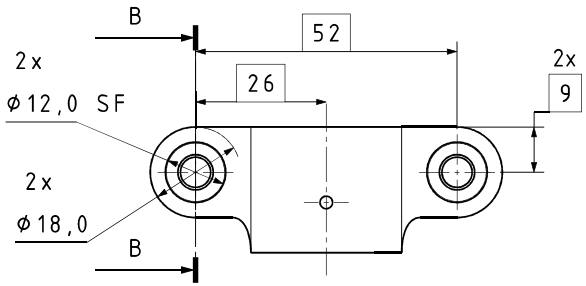

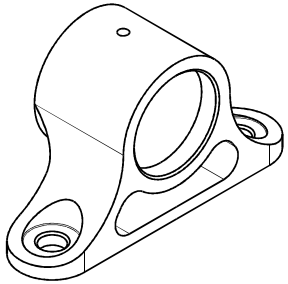

ISOMETRIC VIEW

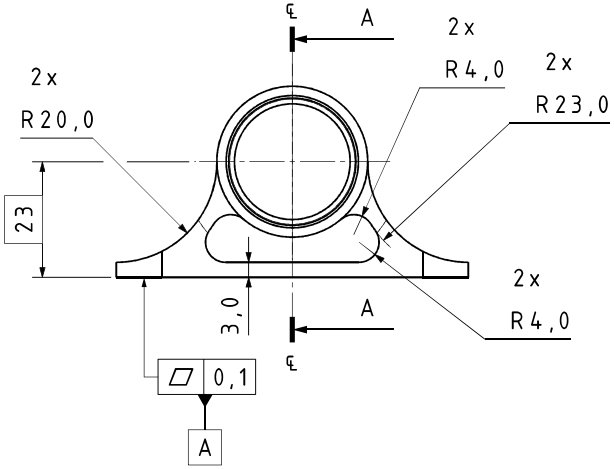

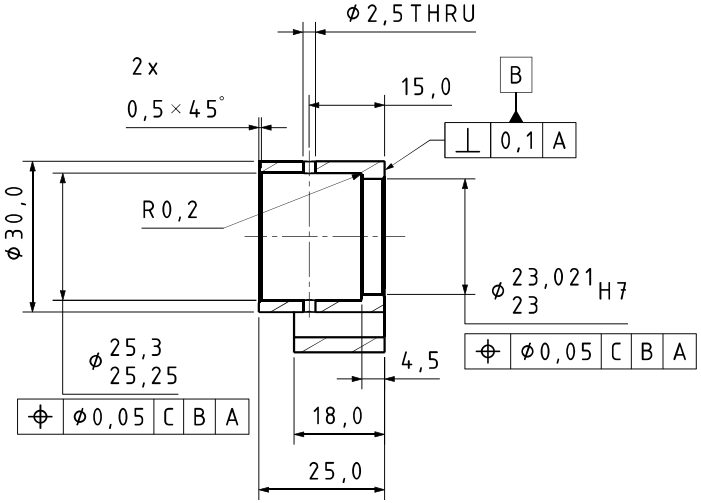

SECTION A-A

NOTES:

1. BREAK ALL SHARP EDGES.

2. PART IS SYMMETRICAL ABOUT CENTRE LINE '℄'

3. ANY UNDIMENSIONED FEATURE REFER TO CAD DATA ⌓ 0,2

4. 2 OFF PARTS REQUIRED.

UBRacing	MATERIAL CERTIFICATE REQUIRED DIMENSIONS IN MILIMETRES U.O.S	COMPONENT MASS (kg)	0,033	MATERIAL SPEC	ALUMINIUM 7075
				HEAT TREATMENT	N/A
A3	IF IN DOUBT - ASK DO NOT SCALE	DRAWN BY	EPC	SURFACE TREATMENT	ANODIZE
	0 DECIMAL PLACES ±0.50 1 DECIMAL PLACE ±0.25 2 DECIMAL PLACES ±0.10 3 DECIMAL PLACES ±0.02 GENERAL CONCENTRICITY 0.1 TIR ANGULAR TOLERANCE ±0.25° REMOVE BURRS AND SHARP EDGES			DESCRIPTION	STEERING RACK MOUNT
TEL.	+44 (0)121 414 4218				
E-MAIL.	ubracing@gmail.com				
This drawing and the copyright herein are the property of UBRacing. It is private & confidential and is issued on the express condition that it is not modified,copied or communicated to any other party without the written consent of UBRacing.		SCALE	1:1	SHEET 1/1	PART NUMBER UBR28_ST_406

REV	DESCRIPTION	INIT	DATE
01A	INITIAL RELEASE	EPC	16/4/25

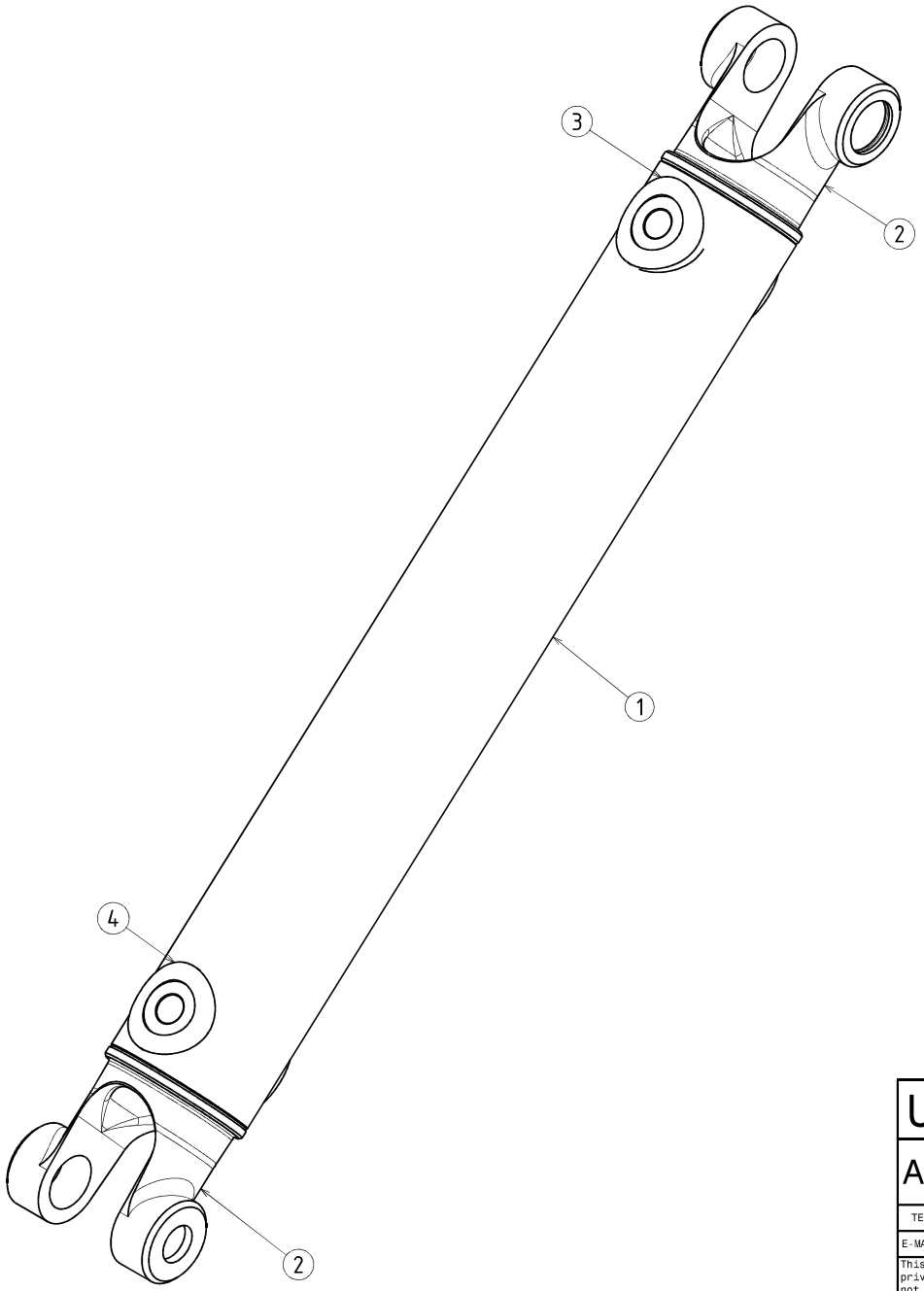

ITEM	QTY	PART NUMBER	PART DESCRIPTION	MATERIAL
001	1	UBR28_ST_207	CARBON TUBE	CARBON FIBRE
002	2	UBR28_ST_N_205	BONDED UJ	TITANIUM 6AL4V
003	4	UBR28_ST_N_210	SUPPORT COLLAR	PLA
004	1	SP-460	3M STRUCTUAL ADHESIVE	N/A

UBRacing

A3

IF IN DOUBT - ASK

DO NOT SCALE

TEL. +44 (0)121 414 4218

E-MAIL. ubracing@gmail.com

MATERIAL CERTIFICATE REQUIRED

DIMENSIONS IN MILIMETRES U.O.S

0 DECIMAL PLACES	±0.50
1 DECIMAL PLACE	±0.25
2 DECIMAL PLACES	±0.10
3 DECIMAL PLACES	±0.02
GENERAL CONCENTRICITY	0.1 TIR
ANGULAR TOLERANCE	±0.25°

REMOVE BURRS AND SHARP EDGES

COMPONENT MASS (kg): 0.2

DRAWN BY: EPC

MATERIAL SPEC: N/A

HEAT TREATMENT: N/A

SURFACE TREATMENT: N/A

DESCRIPTION: BONDED STEERING COLUMN

SCALE: 1:1

SHEET: 1/1

PART NUMBER: UBR28_ST_N_250

This drawing and the copyright herein are the property of UBRacing. It is private & confidential and is issued on the express condition that it is not modified,copied or communicated to any other party without the written consent of UBRacing.

REV	DESCRIPTION	INIT	DATE
01A	INITIAL RELEASE		

Item No.	Quantity	Title	Description	Material
1	1	UBR28_ST_N_101_01A	BACKPLATE	CARBON FIBRE LAMINATE
2	1	UBR28_ST_R_102_01A	HANDLE R	CARBON FIBRE LAMINATE
3	1	UBR28_ST_L_102_01A	HANDLE L	CARBON FIBRE LAMINATE
4	1	UBR28_ST_N_103_01A	FRONT PLATE	CARBON FIBRE LAMINATE

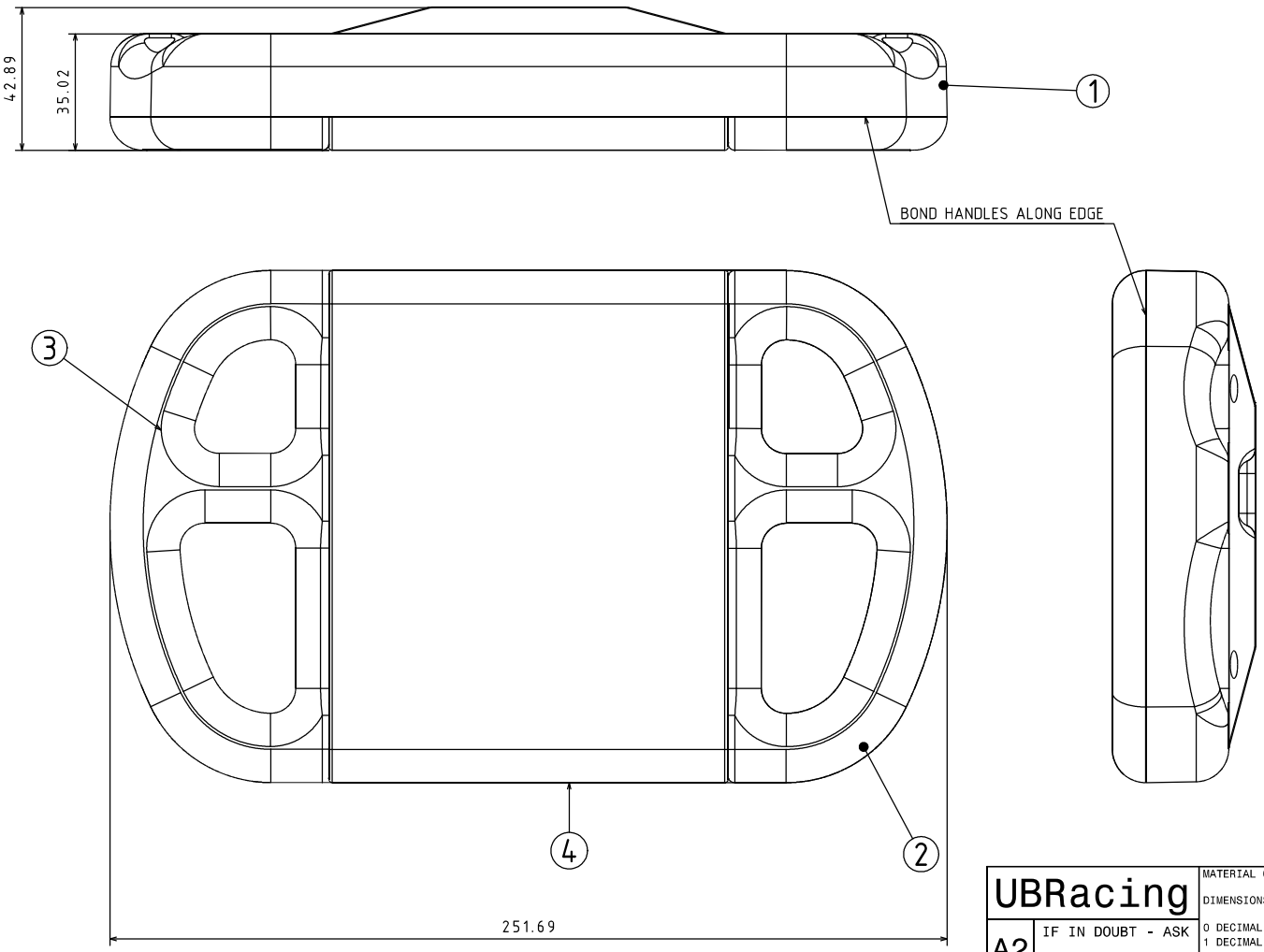

ASSEMBLY INSTRUCTIONS:

1. BOND 2 AND 3 (HANDLES) TO 1 (BACK PLATE) ALONG OUTER EDGE USING VM100 HIGH STRENGTH ADHESIVE
2. CLICK 4 (FRONT PLATE) INTO PLACE

UBRacing	MATERIAL CERTIFICATE REQUIRED DIMENSIONS IN MILIMETRES U.O.S	COMPONENT MASS (kg)	-	MATERIAL SPEC	-
				HEAT TREATMENT	N/A
A2	IF IN DOUBT - ASK DO NOT SCALE	DRAWN BY	KC	SURFACE TREATMENT	N/A
	0 DECIMAL PLACES ±0.50 1 DECIMAL PLACE ±0.25 2 DECIMAL PLACES ±0.10 3 DECIMAL PLACES ±0.02 GENERAL CONCENTRICITY 0.1 TIR ANGULAR TOLERANCE ±0.25° REMOVE BURRS AND SHARP EDGES			DESCRIPTION	STEERING WHEEL CARBON ASSY
TEL.	+44 (0)121 414 4218				
E-MAIL.	ubracing@gmail.com				
SCALE	1:1			SHEET 1/1	PART NUMBER UBR28_ST_N_110_01A

This drawing and the copyright herein are the property of UBRacing. It is private & confidential and is issued on the express condition that it is not modified,copied or communicated to any other party without the written consent of UBRacing.

REV	DESCRIPTION	INIT	DATE
01A	INITIAL RELEASE	EPC	12/3/25

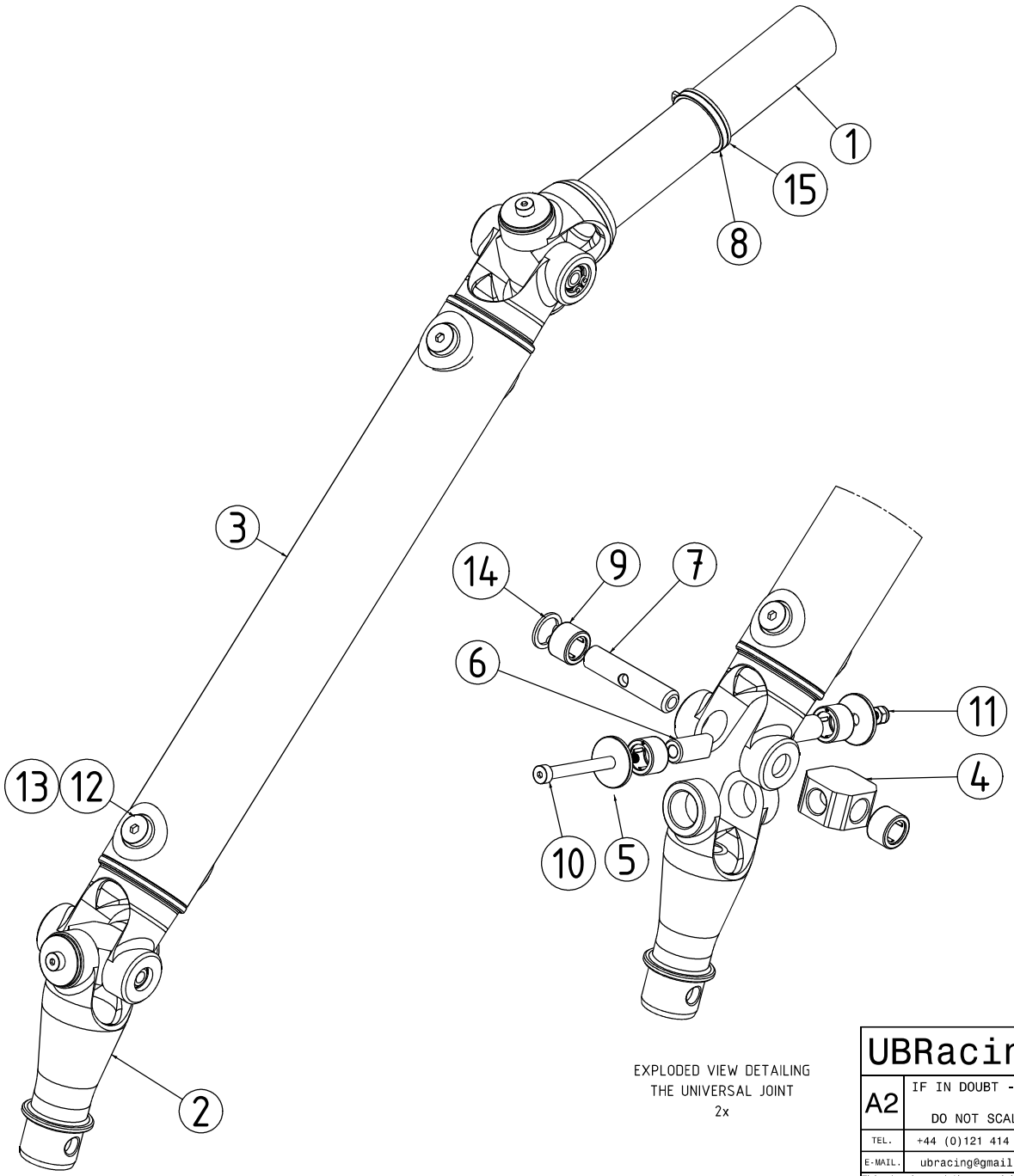

EXPLODED VIEW DETAILING
THE UNIVERSAL JOINT
2x

ITEM	QTY	PART NUMBER	DESCRIPTION	MATERIAL
001	1	UBR28_ST_N_208	TOP RWD YOKE	TITANIUM 6AL/4V
002	1	UBR28_ST_N_201	BOTTOM FWD YOKE	TITANIUM 6AL/4V
003	1	UBR28_ST_N_250	BONDED COLUMN	N/A
004	2	UBR28_ST_N_202	UJ CENTRE	TITANIUM 6AL/4V
005	4	UBR28_ST_N_203	END CAP	6061 ALUMINIUM
006	4	UBR28_ST_N_204	SMALL PIN	STEEL A2
007	2	UBR28_ST_N_206	BIG PIN	STEEL A2
008	1	UBR28_ST_N_209	TOP COLUMN SPACER	6061 ALUMINIUM
009	8	SP-HK 0808	Drawn cup needle roller bearing with open ends	N/A
010	2	SP-SSH-M4-5-40-A2	M4 (5mm) x 40mm AMPG Socket Shoulder Screws - Stainless Steel (A2)	N/A
011	2	SP-NOR2104133X.5	M3 KNUT	N/A
012	2	SP-SSH-M6-35-8-A4	M6 (8mm) x 35mm Socket Shoulder Screws - Marine Stainless Steel (A4)	N/A
013	2	SP-HNN-M5-A2	M5 Hexagon Nylon Locking Nuts (DIN 985) - Stainless Steel (A2-70)	N/A
014	2	SP-HIC-12-A2	12mm Internal Circlips (DIN 472) - 1.4122 Stainless Steel	N/A
015	1	SP-HEC-20-A2	20mm External Circlips (DIN 471) - 1.4122 Stainless Steel	N/A

UBRacing

A2

IF IN DOUBT - ASK

DO NOT SCALE

TEL. +44 (0)121 414 4218

E-MAIL. ubracing@gmail.com

MATERIAL CERTIFICATE REQUIRED

DIMENSIONS IN MILIMETRES U.O.S

0 DECIMAL PLACES	±0.50
1 DECIMAL PLACE	±0.25
2 DECIMAL PLACES	±0.10
3 DECIMAL PLACES	±0.02
GENERAL CONCENTRICITY	0.1 TIR
ANGULAR TOLERANCE	±0.25°

REMOVE BURRS AND SHARP EDGES

This drawing and the copyright herein are the property of UBRacing. It is private & confidential and is issued on the express condition that it is not modified,copied or communicated to any other party without the written consent of UBRacing.

COMPONENT MASS (kg): 0.5

DRAWN BY: EPC

MATERIAL SPEC: N/A

HEAT TREATMENT: N/A

SURFACE TREATMENT: N/A

DESCRIPTION: STEERING COLUMN ASSY

SCALE: 1:1

SHEET: 1/1

PART NUMBER: UBR28_ST_N_200

REV	DESCRIPTION	INIT	DATE
01A	INITIAL RELEASE	EPC	1/6/2025

ITEM No.	Part No.	Description	QTY
001	UBR28_ST_N_302	RWD BRACKET	1
002	SP-61804	SKF LOW FRICTION BEARING	1

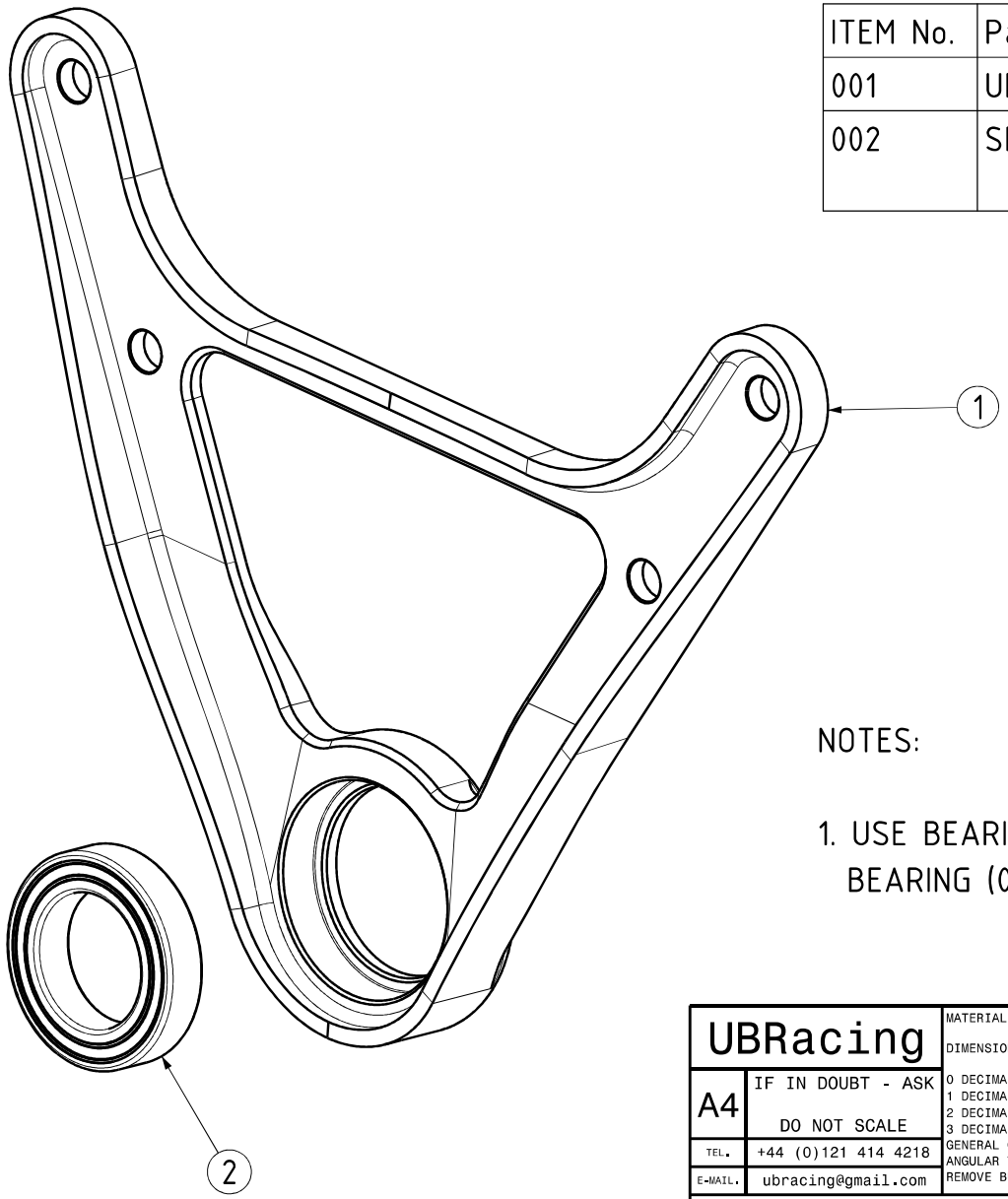

NOTES:

1. USE BEARING RETAINER LOCTITE 641 WHEN PRESSING BEARING (002) INTO THE BRACKET (001)

UBRacing

A4

IF IN DOUBT - ASK

DO NOT SCALE

TEL. +44 (0)121 414 4218

E-MAIL. ubracing@gmail.com

MATERIAL CERTIFICATE REQUIRED

DIMENSIONS IN MILIMETRES U.O.S

0 DECIMAL PLACES	±0.50
1 DECIMAL PLACE	±0.25
2 DECIMAL PLACES	±0.10
3 DECIMAL PLACES	±0.02
GENERAL CONCENTRICITY	0.1 TIR
ANGULAR TOLERANCE	±0.25°

REMOVE BURRS AND SHARP EDGES

COMPONENT MASS (kg): 0.1

DRAWN BY: EPC

MATERIAL SPEC	N/A
HEAT TREATMENT	N/A
SURFACE TREATMENT	N/A

DESCRIPTION: RWD STEERING COLUMN BRACKET

SCALE: 1:1

SHEET 1/1

PART NUMBER: UBR28_ST_N_300

This drawing and the copyright herein are the property of UBRacing. It is private & confidential and is issued on the express condition that it is not modified, copied or communicated to any other party without the written consent of UBRacing.

REV	DESCRIPTION	INIT	DATE
01A	INITIAL RELEASE	EPC	1/6/25

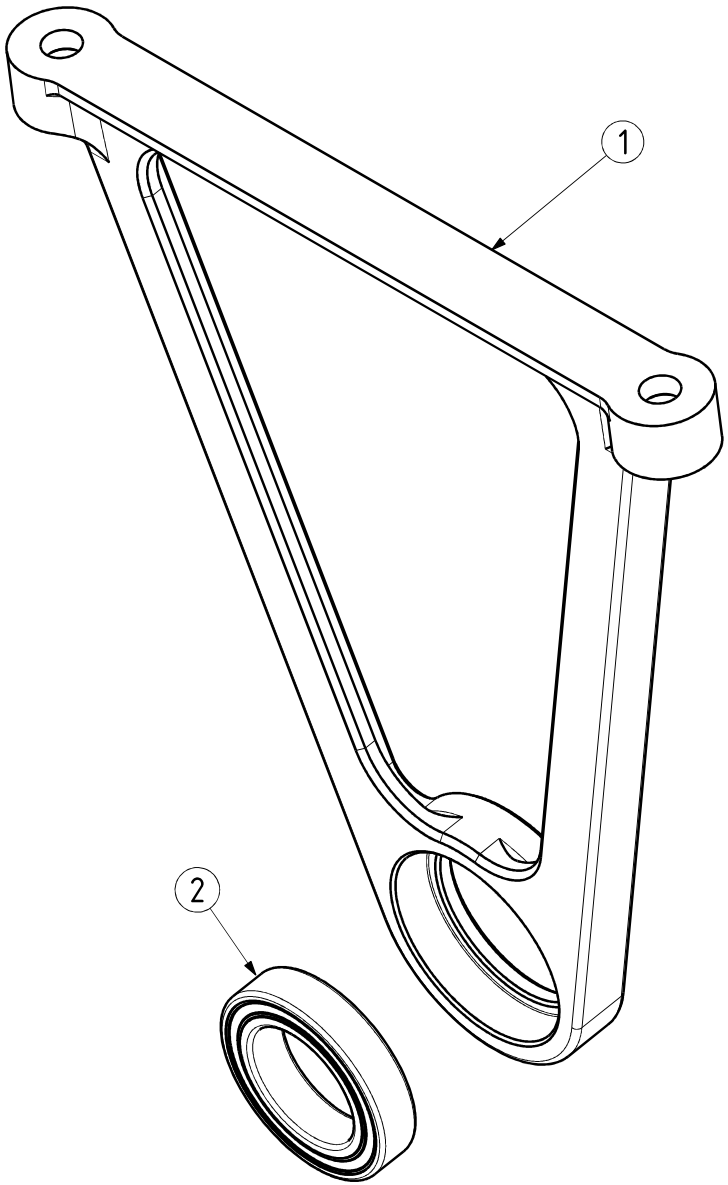

ITEM No.	Part No.	Description	QTY
001	UBR28_ST_N_502	FWD BRACKET	1
002	SP-61804	SKF LOW FRICTION BEARING	1

NOTES:

1. USE BEARING RETAINER LOCTITE 641 WHEN PRESSING BEARING (002) INTO THE BRACKET (001)

UBRacing

A4

IF IN DOUBT - ASK

DO NOT SCALE

TEL. +44 (0)121 414 4218

E-MAIL. ubracing@gmail.com

MATERIAL CERTIFICATE REQUIRED

DIMENSIONS IN MILIMETRES U.O.S

0 DECIMAL PLACES	±0.50
1 DECIMAL PLACE	±0.25
2 DECIMAL PLACES	±0.10
3 DECIMAL PLACES	±0.02
GENERAL CONCENTRICITY	0.1 TIR
ANGULAR TOLERANCE	±0.25°

REMOVE BURRS AND SHARP EDGES

COMPONENT MASS (kg): 0.086

DRAWN BY: EPC

MATERIAL SPEC	N/A
HEAT TREATMENT	N/A
SURFACE TREATMENT	N/A

DESCRIPTION: FWD STEERING COLUMN BRACKET

This drawing and the copyright herein are the property of UBRacing. It is private & confidential and is issued on the express condition that it is not modified, copied or communicated to any other party without the written consent of UBRacing.

SCALE 1:1

SHEET 1/1

PART NUMBER UBR28_ST_N_500

REV	DESCRIPTION	INIT	DATE
01A	INITIAL RELEASE	EPC	13/02/2025

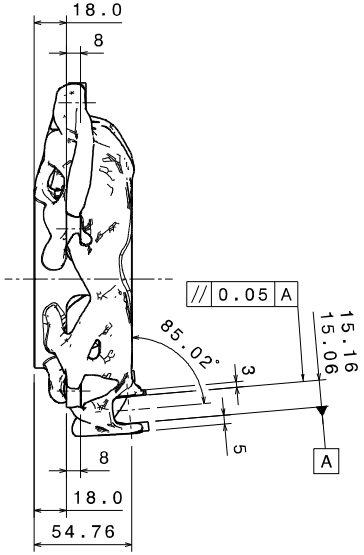

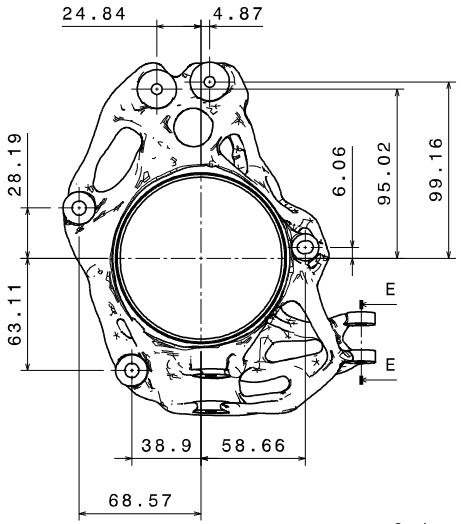

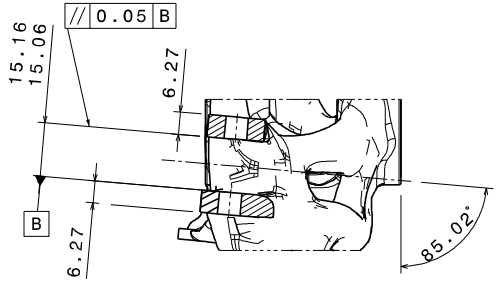

SECTION E-E
1:1

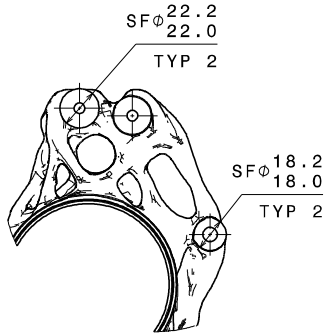

AUXILIARY VIEW D

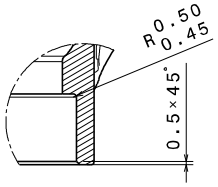

DETAIL G TYP 2
2:1

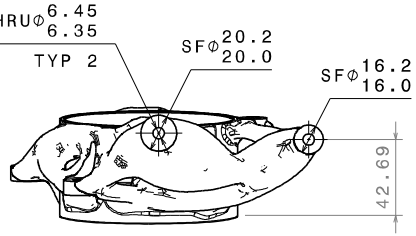

AUXILIARY VIEW A

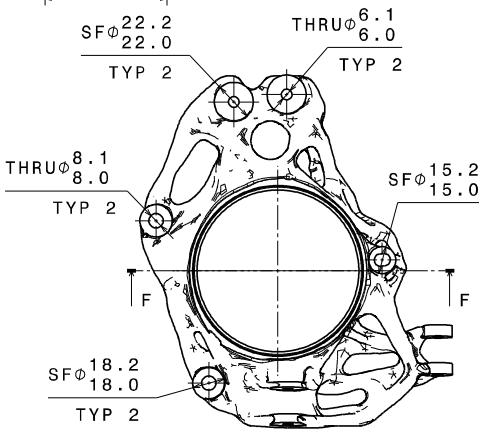

AUXILIARY VIEW C

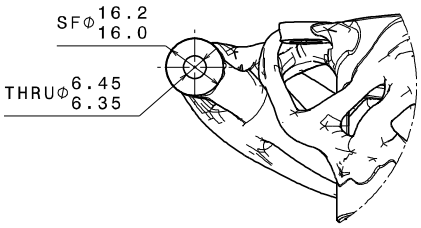

AUXILIARY VIEW B
1:1

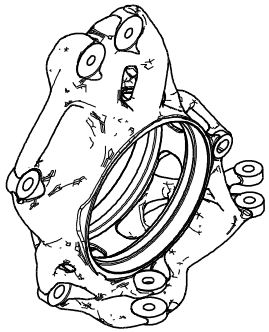

ISOMETRIC VIEW
LEFT HAND PART

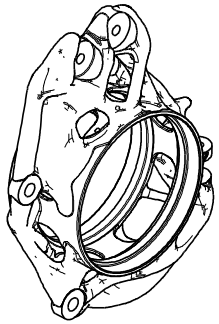

ISOMETRIC VIEW
RIGHT HAND PART

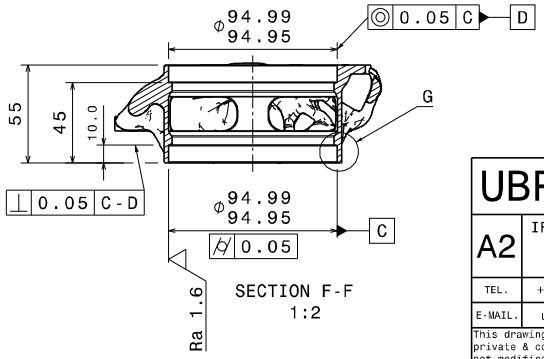

SECTION F-F
1:2

NOTES:
SPOT FACE CORNERS MIN RAD 0.5

UBRacing	MATERIAL CERTIFICATE REQUIRED DIMENSIONS IN MILIMETRES U.O.S	COMPONENT MASS (kg)	0.636	MATERIAL SPEC	AlSI 10mg
A2	IF IN DOUBT - ASK DO NOT SCALE	0 DECIMAL PLACES ±0.50 1 DECIMAL PLACE ±0.25 2 DECIMAL PLACES ±0.10 3 DECIMAL PLACES ±0.02 GENERAL CONCENTRICITY 0.1 TIR ANGULAR TOLERANCE ±0.25°		HEAT TREATMENT	N/A
TEL.	+44 (0)121 414 4218		DRAWN BY	SURFACE TREATMENT	N/A
E-MAIL.	ubracing@gmail.com	REMOVE BURRS AND SHARP EDGES	EPC	DESCRIPTION	FRONT UPRIGHTS MACHINED
This drawing and the copyright herein are the property of UBRacing. It is private & confidential and is issued on the express condition that it is not modified,copied or communicated to any other party without the written consent of UBRacing.			SCALE 1:2	SHEET 1/1	PART NUMBER UBR28_OB_L_300 UBR28_OB_R_300

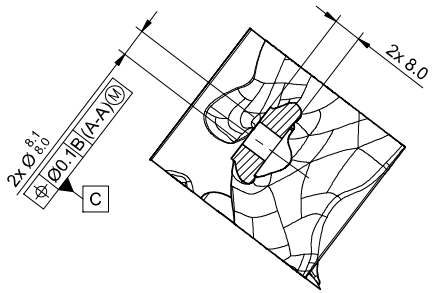

SECTION C-C
1:1

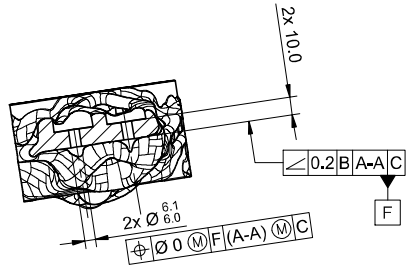

SECTION E-E
1:1

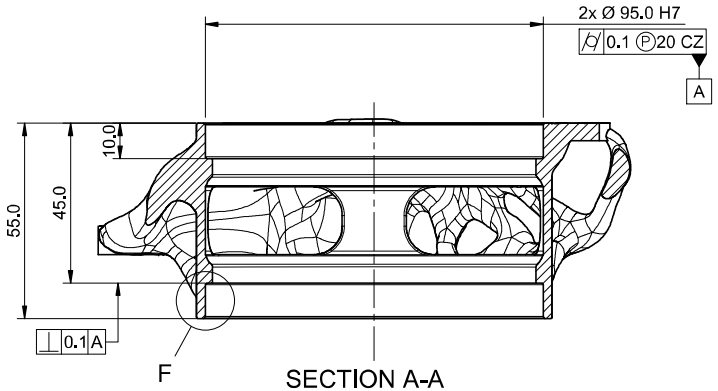

SECTION A-A
1:1

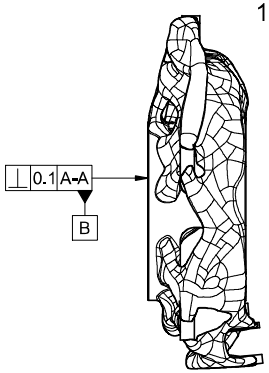

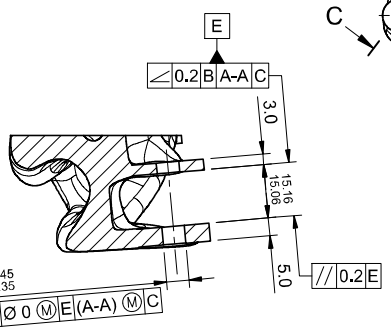

SECTION D-D
1:1

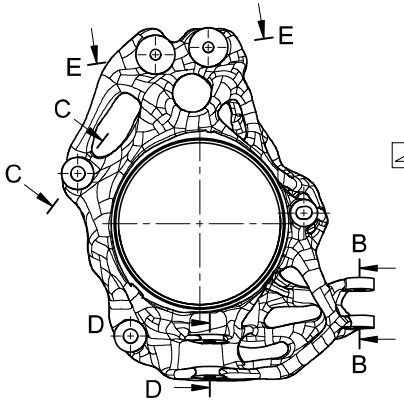

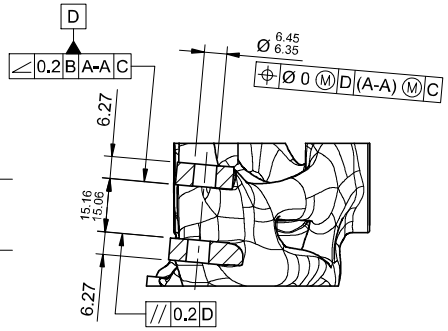

SECTION B-B
1:1

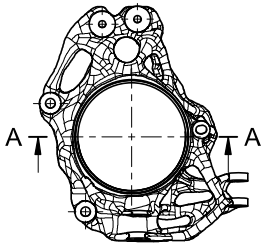

FRONT VIEW
1:3

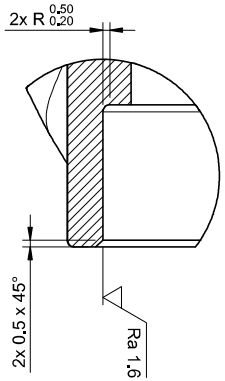

DETAIL F-F
4:1

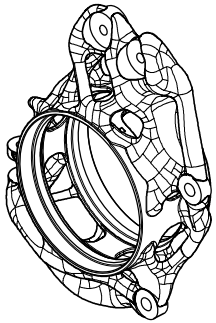

ISOMETRIC VIEW
LEFT HAND PART

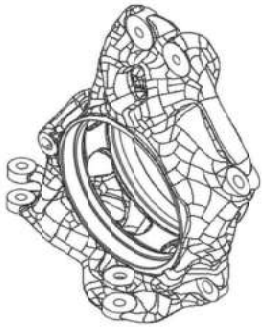

ISOMETRIC VIEW
RIGHT HAND PART

NOTES:
1. ALL TEDS TAKEN FROM CAD DATA
2. ALL UNDIMENSION SURFACES
0.2 A-A B C

UBRacing	MATERIAL CERTIFICATE REQUIRED DIMENSIONS IN MILLIMETERS UNLESS 0 DECIMAL PLACES ±0.49 1 DECIMAL PLACE ±0.25 2 DECIMAL PLACES ±0.10 3 DECIMAL PLACES ±0.05 GENERAL CONCENTRICITY 0.1 TIR ANGULAR TOLERANCE ±0.25° REMOVE BURRS AND SHARP EDGES	COMPONENT MASS (kg) 0.626	MATERIAL SPEC.	AISI 10mg	
			HEAT TREATMENT	N/A	
A2 IF IN DOUBT - ASK DO NOT SCALE		DRAWN BY: EPC	SURFACE TREATMENT	N/A	
TEL. +44 (0)121 414 4218			DESCRIPTION: FRONT UPRIGHTS MACHINED		
E-MAIL. ubracing@gmail.com					
This drawing and the copyright herein are the property of UBRacing. It is private & confidential and is issued on the express condition that it is not modified, copied or communicated to any other party without the written consent of UBRacing.		SCALE 1:2	SHEET 1/1	PART NUMBER	UBR28_DB_C_300 UBR28_DB_C_300

REV	DESCRIPTION	INIT	DATE
01A	INITIAL RELEASE	EPC	13/02/2025

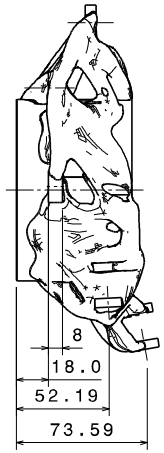

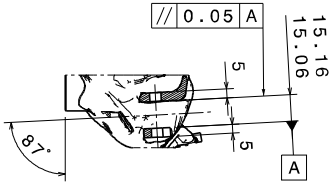

SECTION E-E

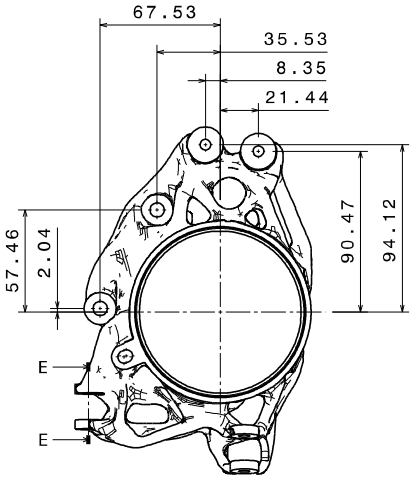

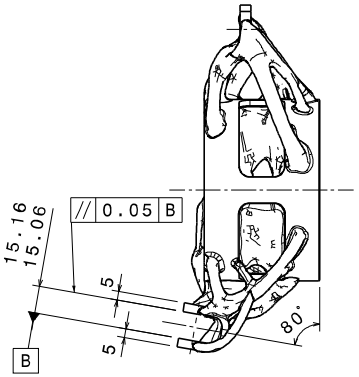

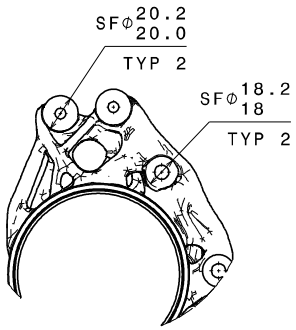

AUXILARY VIEW B

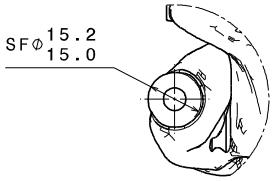

AUXILARY VIEW E
1:1

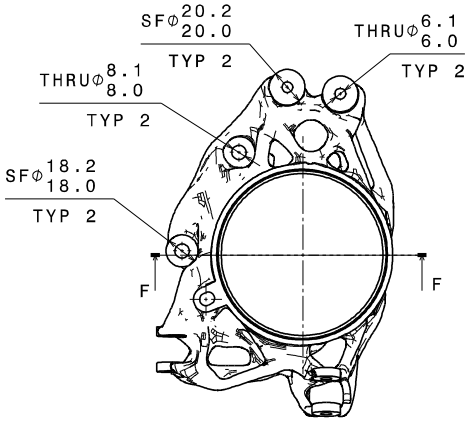

AUXILARY VIEW A

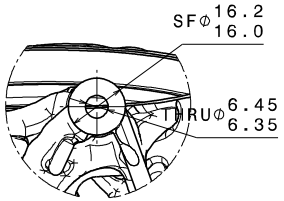

AUXILARY VIEW D
1:1

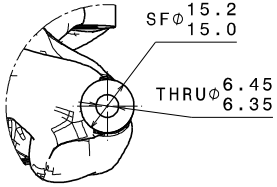

AUXILARY VIEW C
1:1

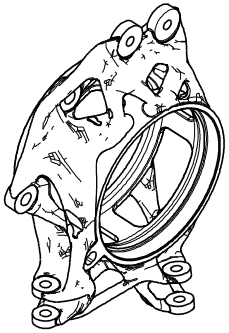

ISOMETRIC
LEFT HAND PART

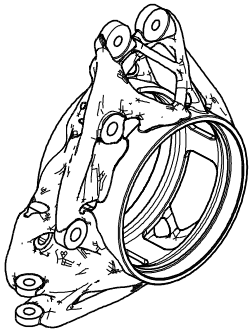

ISOMETRIC
RIGHT HAND PART

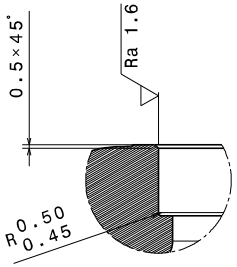

DETAIL G TYP 2
1:1

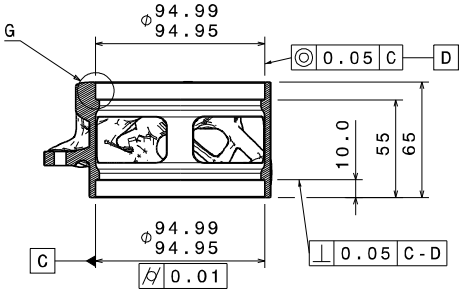

SECTION F-F

NOTES:
SPOT FACE CORNERS MIN RAD 0.5

UBRacing	MATERIAL CERTIFICATE REQUIRED DIMENSIONS IN MILIMETRES U.O.S	COMPONENT MASS (kg)	0.482	MATERIAL SPEC	AlSI 10mg
A2	IF IN DOUBT - ASK DO NOT SCALE			HEAT TREATMENT	N/A
	0 DECIMAL PLACES ±0.50 1 DECIMAL PLACE ±0.25 2 DECIMAL PLACES ±0.10 3 DECIMAL PLACES ±0.02 GENERAL CONCENTRICITY 0.1 TIR ANGULAR TOLERANCE ±0.25°	DRAWN BY	EPC	SURFACE TREATMENT	N/A
TEL.	+44 (0)121 414 4218			DESCRIPTION	REAR UPRIGHT MACHINED
E-MAIL.	ubracing@gmail.com REMOVE BURRS AND SHARP EDGES				
This drawing and the copyright herein are the property of UBRacing. It is private & confidential and is issued on the express condition that it is not modified,copied or communicated to any other party without the written consent of UBRacing.		SCALE	1:2	SHEET 1/1	PART NUMBER UBR28_OB_L_400 UBR28_OB_R_400

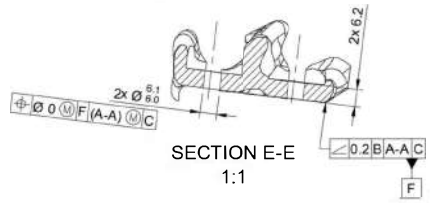

SECTION E-E
1:1

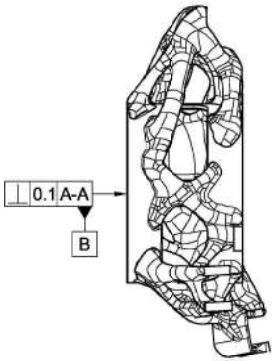

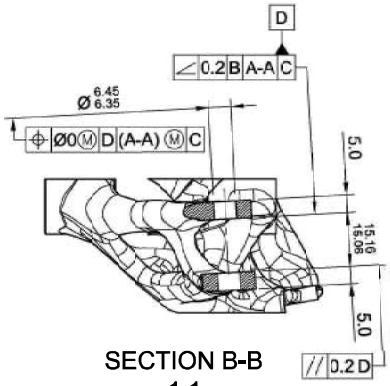

SECTION B-B
1:1

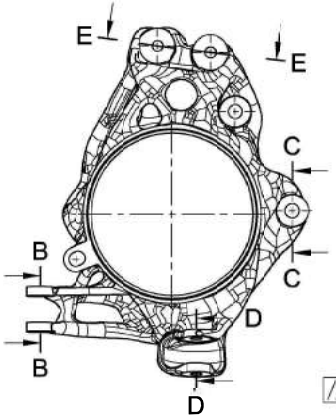

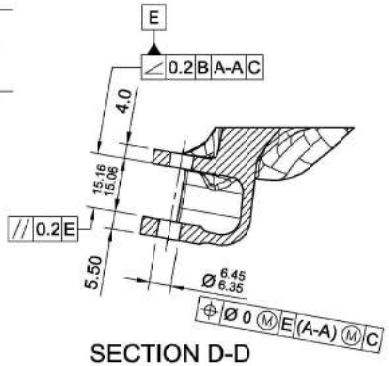

SECTION D-D
1:1

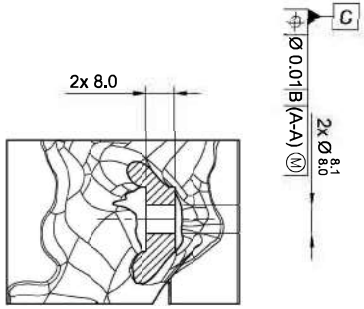

SECTION C-C
1:1

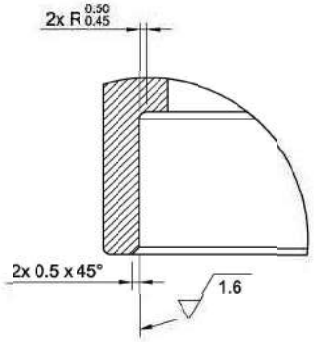

DETAIL F-F
4:1

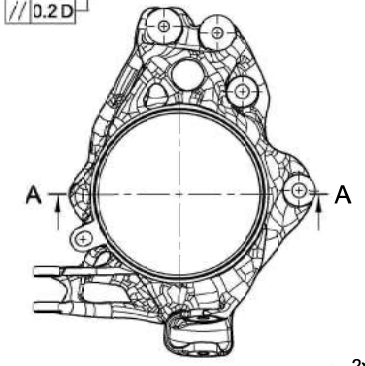

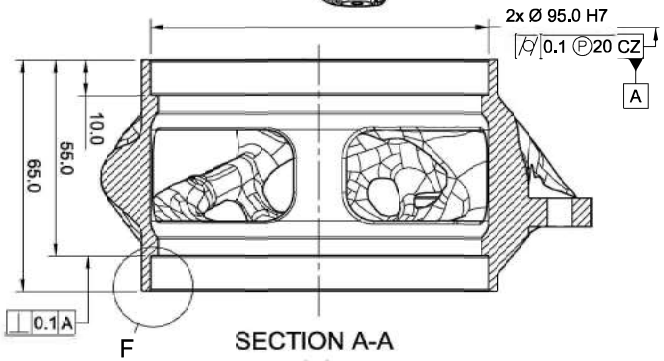

SECTION A-A
1:1

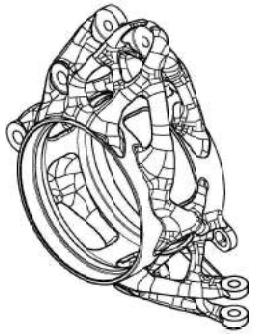

ISOMETRIC VIEW
LEFT HAND PART

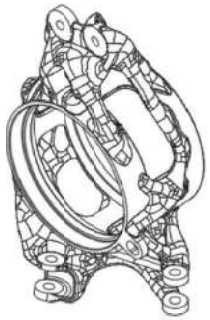

ISOMETRIC VIEW
RIGHT HAND PART

NOTES:
1. ALL TEDS TAKEN FROM CAD DATA
2. ALL UNDIMNESION SURFACES
0.2 A-A B C

UBRacing	MATERIAL CERTIFICATE REQUIRED	COMPONENT MASS (KG) 0.483	MATERIAL (EN)	AlSi 10mg	
A2 IF IN DOUBT - ASK	DIMENSIONS IN MILIMETERS (J.O.B)		HEAT TREATMENT	N/A	
DO NOT SCALE	0 DECIMAL PLACES ±0.50	DRAWN BY: EPC	SURFACE TREATMENT	N/A	
TEL. : +44 (0)121 414 4218	1 DECIMAL PLACE ±0.25		DESCRIPTION: REAR UPRIGHTS MACHINED		
E-MAIL: ubracing@gmail.com	2 DECIMAL PLACES ±0.10				
	3 DECIMAL PLACES ±0.0 2				
	GENERAL CONCENTRICITY 0 .1 TIR				
	ANGULAR TOLERANCE ±0.25°				
	REMOVE BURRS AND SHARP EDGES	SCALE 1:2	SHEET 1/1	PART NUMBER UBR25_OB_L_400-B	

This drawing and the copyright herein are the property of UBRacing. It is private & confidential and is issued on the express condition that it is not modified, copied or communicated to any other party without the written consent of UBRacing.

REV	DESCRIPTION	INIT	DATE
01A	INITIAL RELEASE	SW	09/01/2025

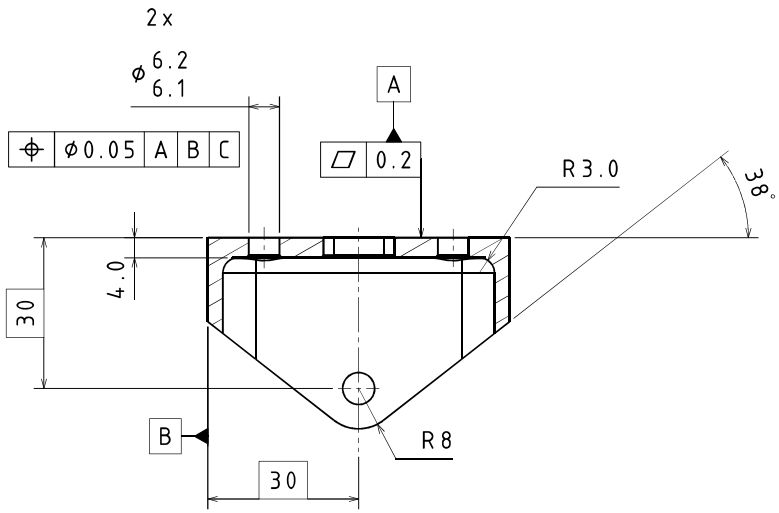

SECTION B-B

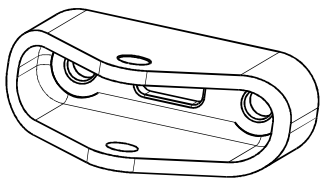

ISOMETRIC VIEW

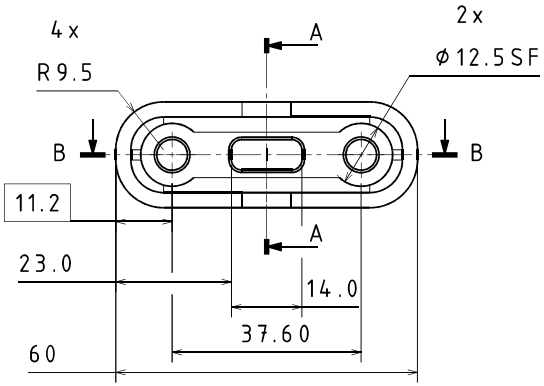

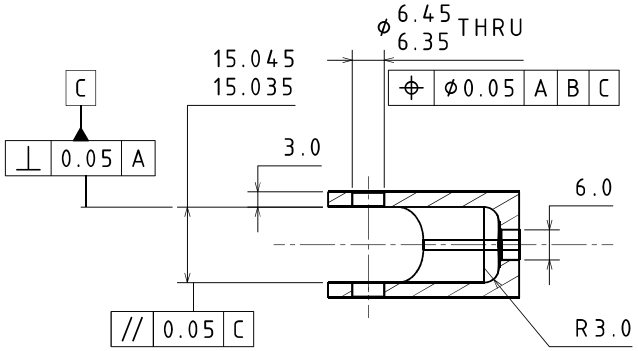

SECTION A-A

NOTES:
- BREAK ALL SHARP EDGES
- FOR GENERAL TOLERANCES SEE TABLE
- REFER TO CAD
- STAMP DESCRIPTION ON BACK FACE (L FOR ORIGINAL, R FOR SYMOPP)

UBRacing	MATERIAL CERTIFICATE REQUIRED DIMENSIONS IN MILIMETRES U.O.S 0 DECIMAL PLACES ±0.50 1 DECIMAL PLACE ±0.25 2 DECIMAL PLACES ±0.10 3 DECIMAL PLACES ±0.02 GENERAL CONCENTRICITY 0.1 TIR ANGULAR TOLERANCE ±0.25°	COMPONENT MASS (kg)	0.038	MATERIAL SPEC	ALUMINIUM 7075
				HEAT TREATMENT	N/A
A3	IF IN DOUBT - ASK DO NOT SCALE	DRAWN BY	SW	SURFACE TREATMENT	N/A
		APPROVED BY	EC	DESCRIPTION	FUF L/R
TEL.	+44 (0)121 414 4218				
E-MAIL.	ubracing@gmail.com				
This drawing and the copyright herein are the property of UBRacing. It is private & confidential and is issued on the express condition that it is not modified,copied or communicated to any other party without the written consent of UBRacing.		SCALE	1:1	SHEET 1/1	PART NUMBER UBR28_SU_L_101_03B

REV	DESCRIPTION	INIT	DATE
01A	INITIAL RELEASE	SW	09/01/2025

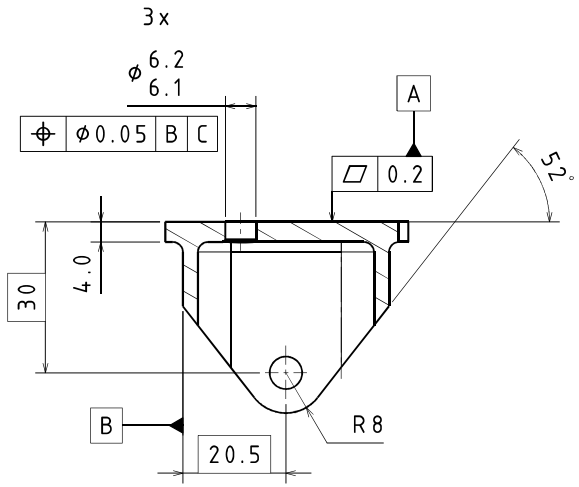

SECTION A-A

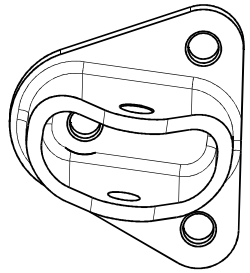

ISOMETRIC VIEW

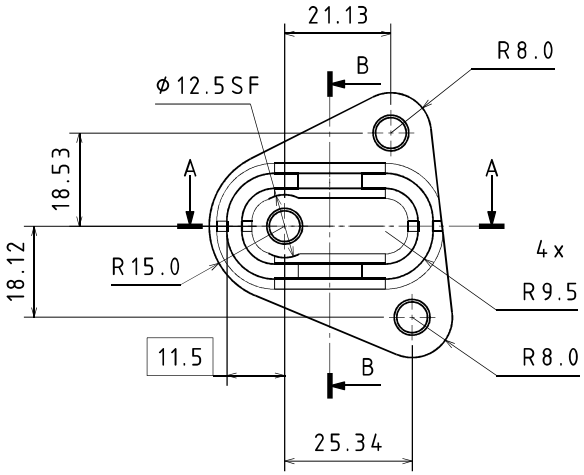

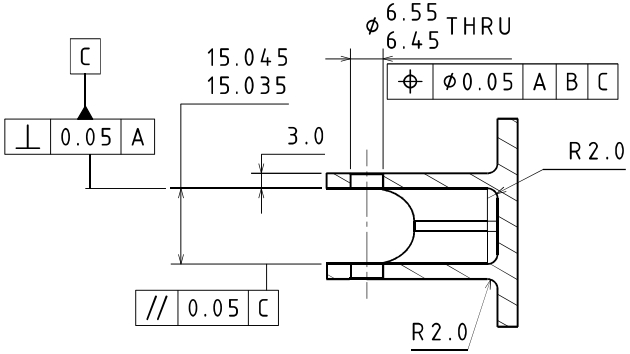

SECTION B-B

NOTES
- BREAK ALL SHARP EDGES
- FOR GENERAL TOLERANCES SEE TABLE
- REFER TO CAD
- STAMP DESCRIPTION ON BACK FACE (L FOR ORIGINAL, R FOR SYMOPP)

UBRacing	MATERIAL CERTIFICATE REQUIRED DIMENSIONS IN MILIMETRES U.O.S	COMPONENT MASS (kg)	0.039	MATERIAL SPEC	ALUMINIUM 7075
				HEAT TREATMENT	N/A
A3	IF IN DOUBT - ASK DO NOT SCALE	DRAWN BY	SW	SURFACE TREATMENT	N/A
	0 DECIMAL PLACES ±0.50 1 DECIMAL PLACE ±0.25 2 DECIMAL PLACES ±0.10 3 DECIMAL PLACES ±0.02 GENERAL CONCENTRICITY 0.1 TIR ANGULAR TOLERANCE ±0.25°	APPROVED BY	EC	DESCRIPTION	FUR L/R
TEL.	+44 (0)121 414 4218				
E-MAIL.	ubracing@gmail.com				
This drawing and the copyright herein are the property of UBRacing. It is private & confidential and is issued on the express condition that it is not modified,copied or communicated to any other party without the written consent of UBRacing.		SCALE	1:1	SHEET 1/1	PART NUMBER UBR28_SU_1_102_03A

REV	DESCRIPTION	INIT	DATE
01A	INITIAL RELEASE	SW	09/01/2025

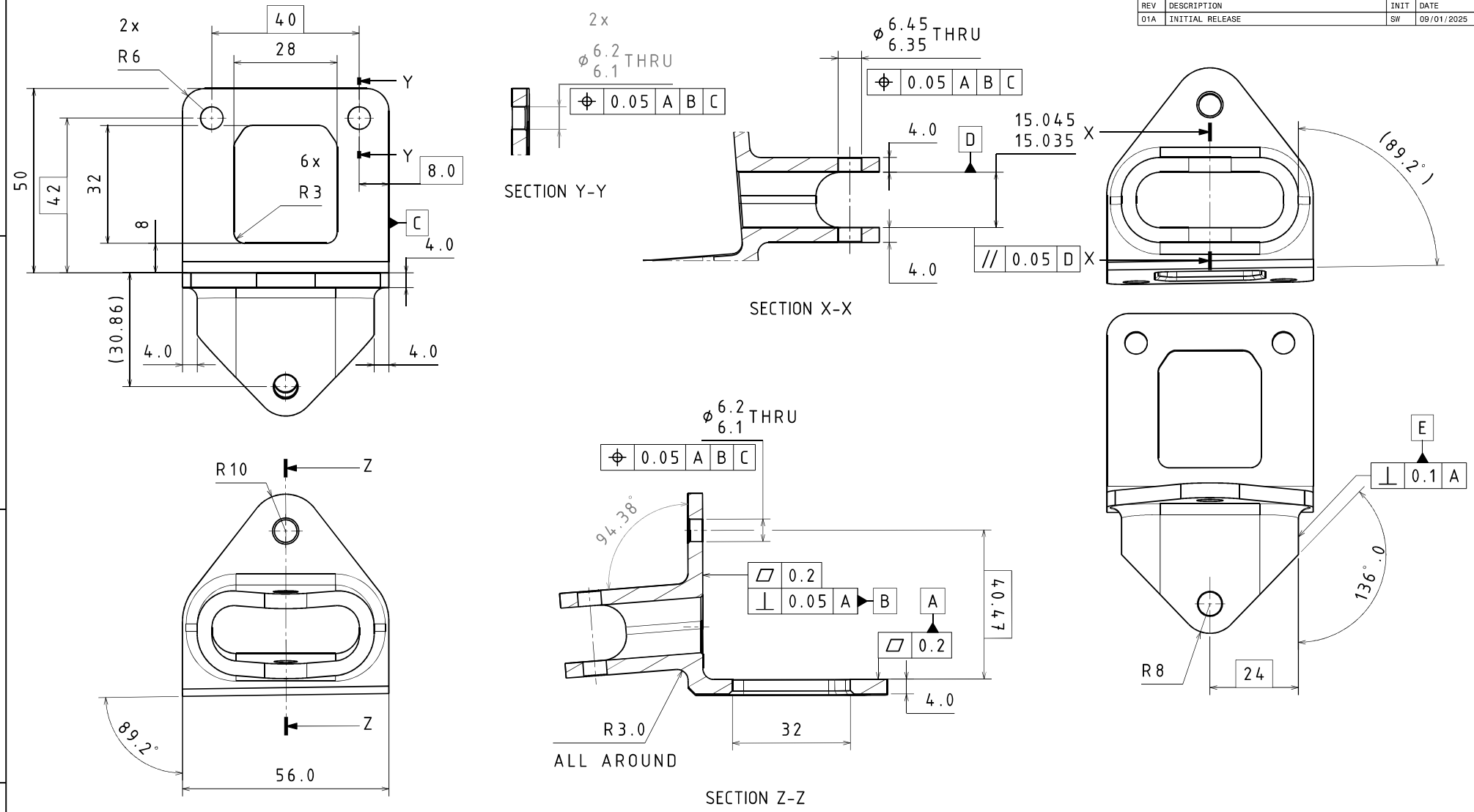

NOTES:
- BREAK ALL SHARP EDGES
- FOR GENERAL TOLERANCES SEE TABLE (LOC, C2)
- FOR UNDIMENSIONED FEATURES REFER TO CAD ⌓ 0.2
- STAMP DESCRIPTION ON BACK FACE (L FOR ORIGINAL, R FOR SYMOPP)
- ARMS SYMMETRIC ABOUT CENTER

UBRacing	MATERIAL CERTIFICATE REQUIRED DIMENSIONS IN MILIMETRES U.O.S 0 DECIMAL PLACES ±0.50 1 DECIMAL PLACE ±0.25 2 DECIMAL PLACES ±0.10 3 DECIMAL PLACES ±0.02 GENERAL CONCENTRICITY 0.1 TIR ANGULAR TOLERANCE ±0.25°	COMPONENT MASS (kg)	0.075	MATERIAL SPEC	ALUMINIUM 7075
A3 IF IN DOUBT - ASK DO NOT SCALE		DRAWN BY	SW	HEAT TREATMENT	N/A
				SURFACE TREATMENT	N/A
TEL. +44 (0)121 414 4218		APPROVED BY	EC	DESCRIPTION	FLF L/R
E-MAIL. ubracing@gmail.com					
This drawing and the copyright herein are the property of UBRacing. It is private & confidential and is issued on the express condition that it is not modified,copied or communicated to any other party without the written consent of UBRacing.		SCALE	1:1	SHEET 1/1	PART NUMBER UBR28_SU_L_103_03B

REV	DESCRIPTION	INIT	DATE
01A	INITIAL RELEASE	SW	09/01/2025

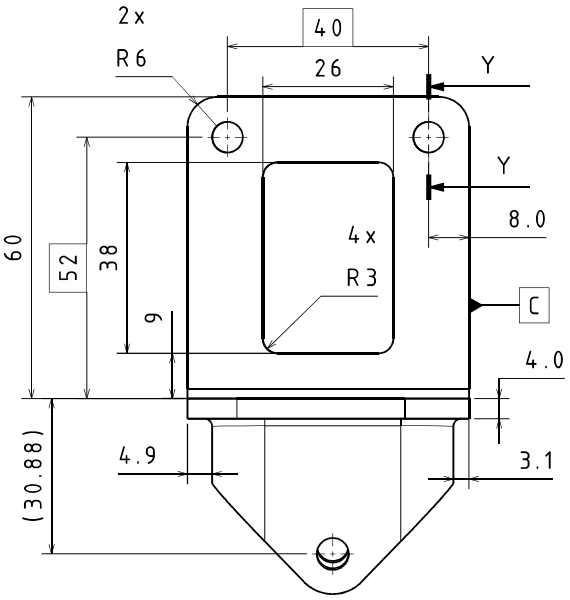

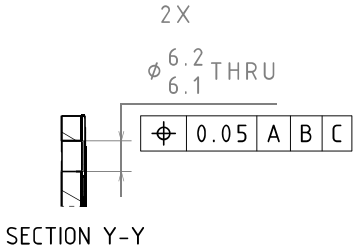

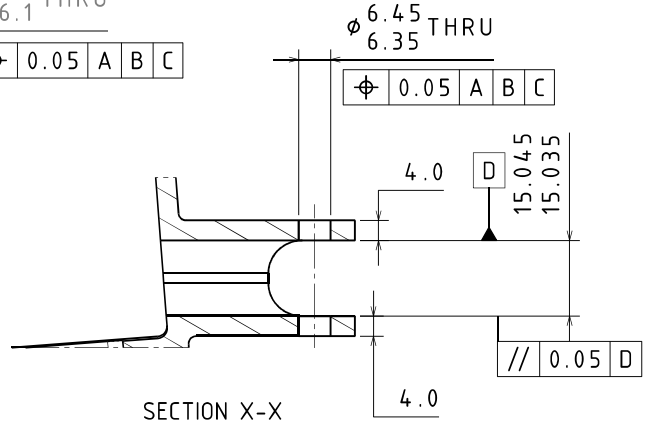

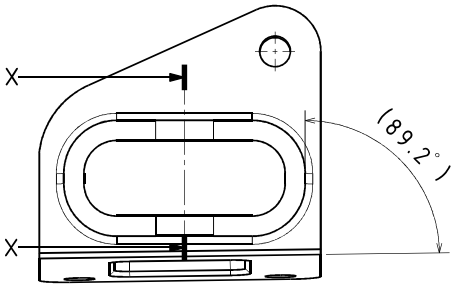

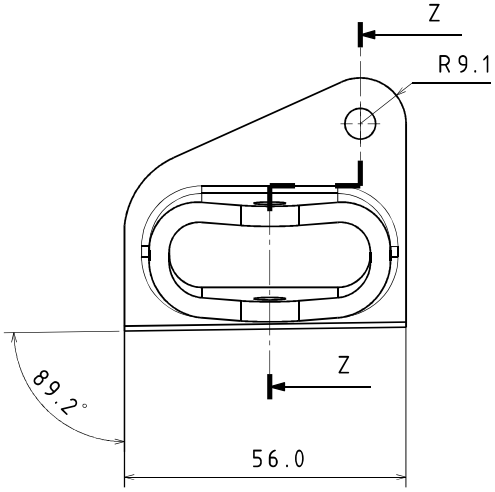

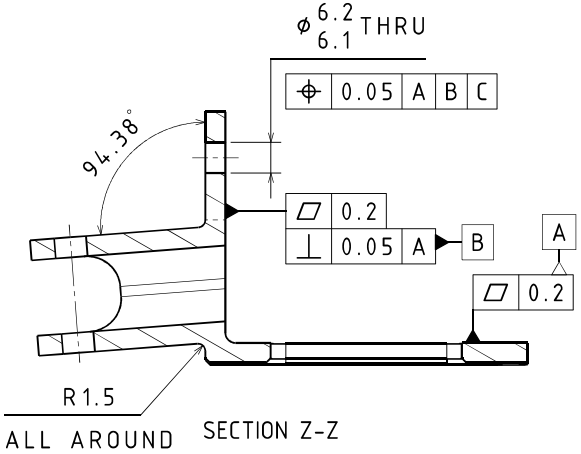

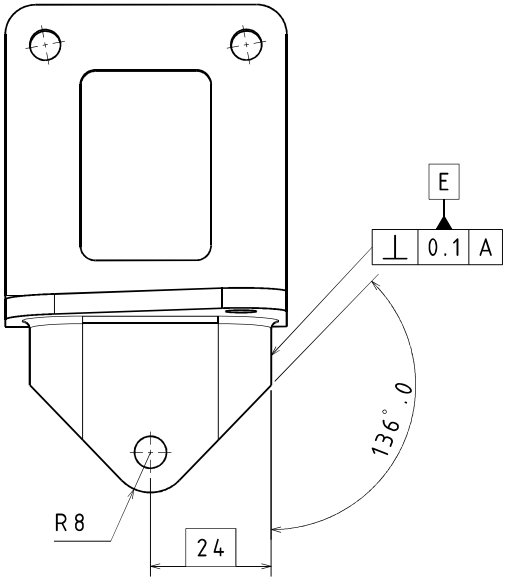

NOTES:
- BREAK ALL SHARP EDGES
- FOR GENERAL TOLERANCES SEE TABLE (LOC, C2)
- FOR UNDIMENSIONED FEATURES REFER TO CAD ⌓ 0.2
- STAMP DESCRIPTION ON BACK FACE (L FOR ORIGINAL, R FOR SYMOPP)
- ARMS SYMMETRIC ABOUT CENTER

UBRacing	MATERIAL CERTIFICATE REQUIRED DIMENSIONS IN MILIMETRES U.O.S 0 DECIMAL PLACES ±0.50 1 DECIMAL PLACE ±0.25 2 DECIMAL PLACES ±0.10 3 DECIMAL PLACES ±0.02 GENERAL CONCENTRICITY 0.1 TIR ANGULAR TOLERANCE ±0.25°	COMPONENT MASS (kg)	0.075	MATERIAL SPEC	ALUMINIUM 7075
A3 IF IN DOUBT - ASK DO NOT SCALE		DRAWN BY	SW	HEAT TREATMENT	N/A
				SURFACE TREATMENT	N/A
TEL. +44 (0)121 414 4218		APPROVED BY	EC	DESCRIPTION	FLR L/R
E-MAIL. ubracing@gmail.com					
This drawing and the copyright herein are the property of UBRacing. It is private & confidential and is issued on the express condition that it is not modified,copied or communicated to any other party without the written consent of UBRacing.		SCALE	1:1	SHEET 1/1	PART NUMBER UBR28_SU_L_104_03B

REV	DESCRIPTION	INIT	DATE
01A	INITIAL RELEASE	SW	09/01/2025

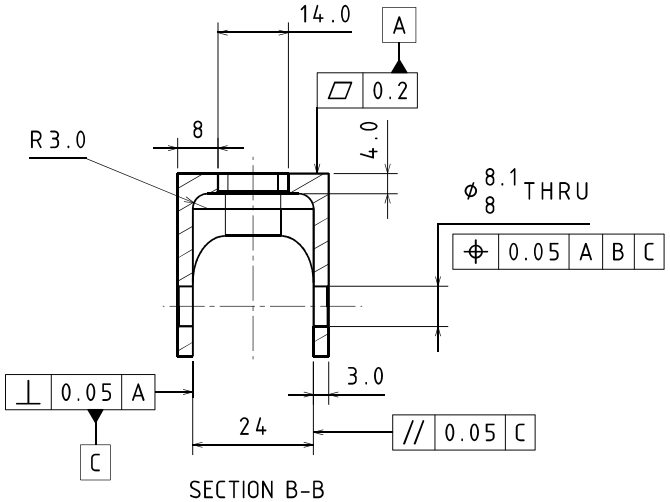

SECTION B-B

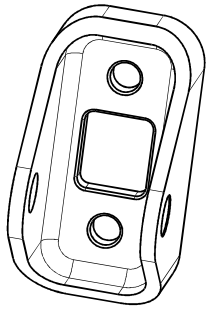

ISOMETRIC VIEW

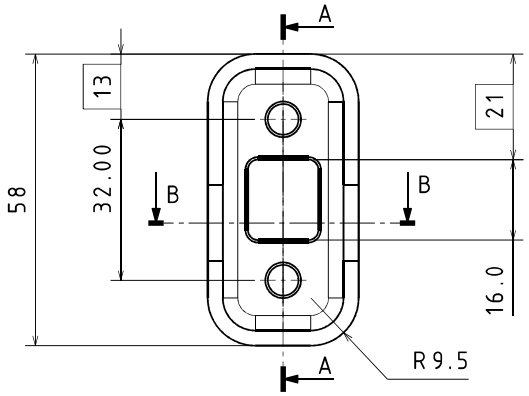

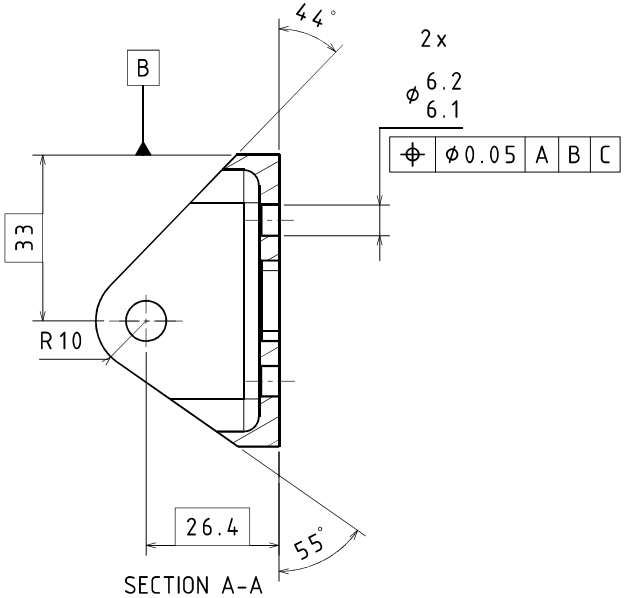

SECTION A-A

NOTES
- BREAK ALL SHARP EDGES
- FOR GENERAL TOLERANCES SEE TABLE
- REFER TO CAD
- STAMP DESCRIPTION ON BACK FACE (L FOR ORIGINAL, R FOR SYMOPP)

UBRacing	MATERIAL CERTIFICATE REQUIRED DIMENSIONS IN MILIMETRES U.O.S	COMPONENT MASS (kg)	0.037	MATERIAL SPEC	ALUMINIUM 7075
				HEAT TREATMENT	N/A
A3	IF IN DOUBT - ASK DO NOT SCALE	DRAWN BY	SW	SURFACE TREATMENT	N/A
	0 DECIMAL PLACES ±0.50 1 DECIMAL PLACE ±0.25 2 DECIMAL PLACES ±0.10 3 DECIMAL PLACES ±0.02 GENERAL CONCENTRICITY 0.1 TIR ANGULAR TOLERANCE ±0.25°	APPROVED BY	EC	DESCRIPTION	FD L/R
TEL.	+44 (0)121 414 4218				
E-MAIL.	ubracing@gmail.com				
This drawing and the copyright herein are the property of UBRacing. It is private & confidential and is issued on the express condition that it is not modified,copied or communicated to any other party without the written consent of UBRacing.		SCALE	1:1	SHEET 1/1	PART NUMBER UBR28_SU_1_105_02A

REV	DESCRIPTION	INIT	DATE
01A	INITIAL RELEASE	SW	09/01/2025

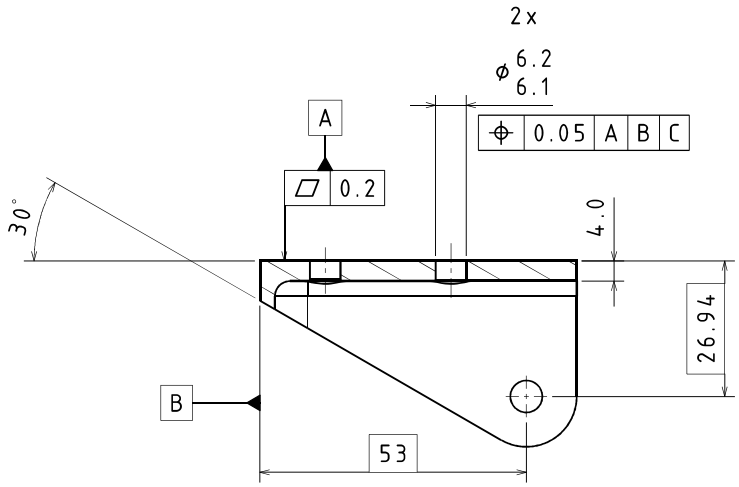

SECTION A-A

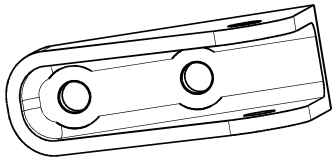

ISOMETRIC VIEW

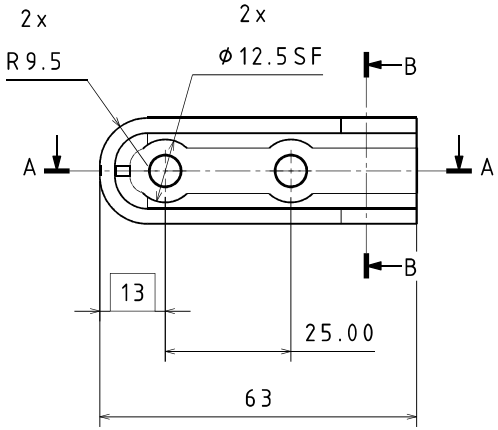

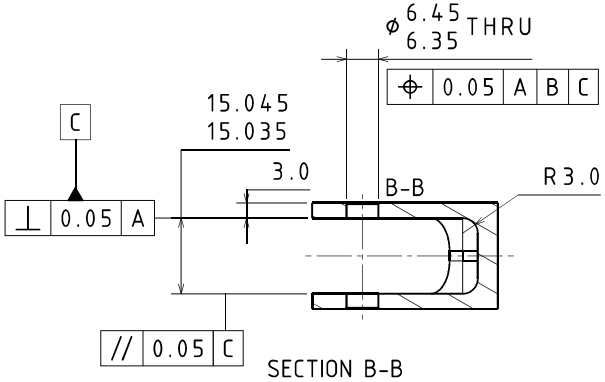

SECTION B-B

NOTES
- BREAK ALL SHARP EDGES
- FOR GENERAL TOLERANCES SEE TABLE
- REFER TO CAD
- STAMP DESCRIPTION ON BACK FACE (L FOR ORIGINAL, R FOR SYMOPP)

UBRacing	MATERIAL CERTIFICATE REQUIRED DIMENSIONS IN MILIMETRES U.O.S 0 DECIMAL PLACES ±0.50 1 DECIMAL PLACE ±0.25 2 DECIMAL PLACES ±0.10 3 DECIMAL PLACES ±0.02 GENERAL CONCENTRICITY 0.1 TIR ANGULAR TOLERANCE ±0.25°	COMPONENT MASS (kg)	0.04	MATERIAL SPEC	ALUMINIUM 7075
				HEAT TREATMENT	N/A
A3	IF IN DOUBT - ASK DO NOT SCALE	DRAWN BY	SW	SURFACE TREATMENT	N/A
		APPROVED BY	EC	DESCRIPTION	RUR L/R
TEL.	+44 (0)121 414 4218				
E-MAIL.	ubracing@gmail.com				
This drawing and the copyright herein are the property of UBRacing. It is private & confidential and is issued on the express condition that it is not modified,copied or communicated to any other party without the written consent of UBRacing.		SCALE	1:1	SHEET 1/1	PART NUMBER UBR28_SU_L_202_02A

REV	DESCRIPTION	INIT	DATE
01A	INITIAL RELEASE	SW	09/01/2025

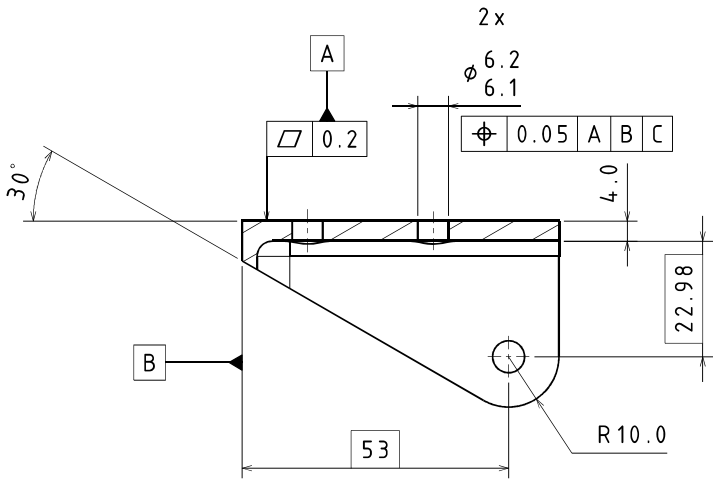

SECTION A-A

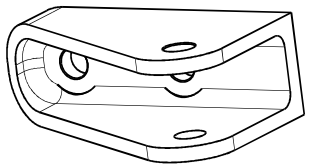

ISOMETRIC VIEW

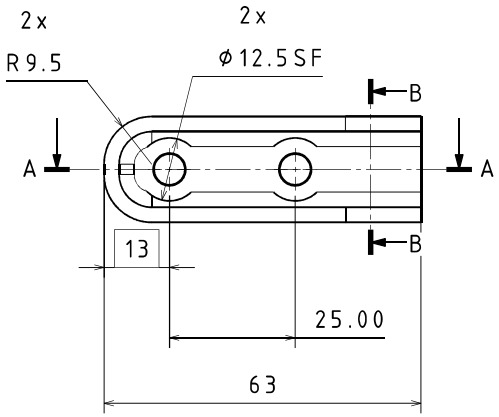

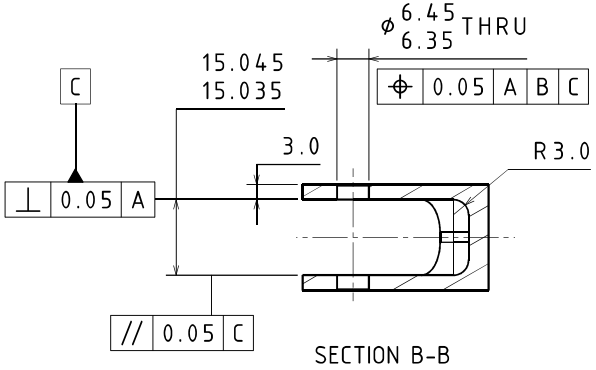

SECTION B-B

NOTES
- BREAK ALL SHARP EDGES
- FOR GENERAL TOLERANCES SEE TABLE
- REFER TO CAD
- STAMP DESCRIPTION ON BACK FACE (L FOR ORIGINAL, R FOR SYMOPP)

UBRacing	MATERIAL CERTIFICATE REQUIRED DIMENSIONS IN MILIMETRES U.O.S 0 DECIMAL PLACES ±0.50 1 DECIMAL PLACE ±0.25 2 DECIMAL PLACES ±0.10 3 DECIMAL PLACES ±0.02 GENERAL CONCENTRICITY 0.1 TIR ANGULAR TOLERANCE ±0.25°	COMPONENT MASS (kg)	0.04
A3	IF IN DOUBT - ASK DO NOT SCALE	DRAWN BY	SW
TEL.	+44 (0)121 414 4218	APPROVED BY	EC
E-MAIL.	ubracing@gmail.com	SCALE	1:1

MATERIAL SPEC	ALUMINIUM 7075
HEAT TREATMENT	N/A
SURFACE TREATMENT	N/A
DESCRIPTION	RLF L/R
SHEET	1/1
PART NUMBER	UBR28_SU_L_203_02A

This drawing and the copyright herein are the property of UBRacing. It is private & confidential and is issued on the express condition that it is not modified,copied or communicated to any other party without the written consent of UBRacing.

REV	DESCRIPTION	INIT	DATE
01A	INITIAL RELEASE	SW	17/03/2025

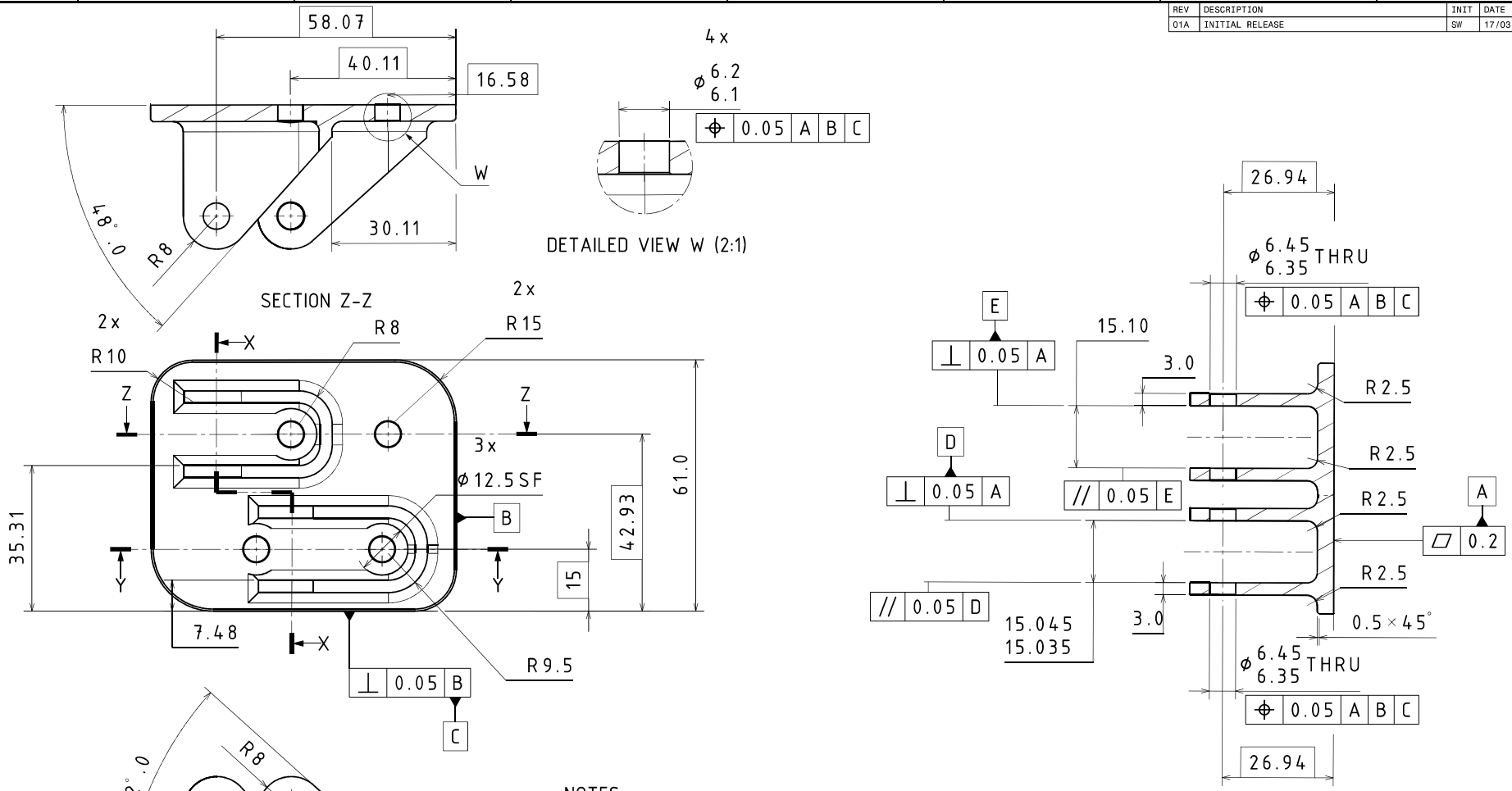

SECTION X-X

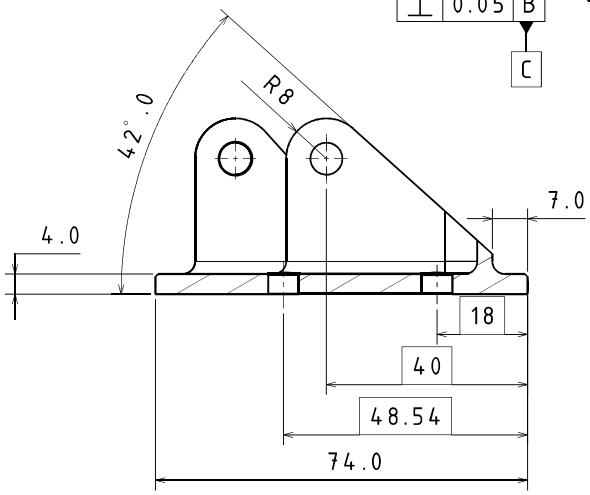

SECTION Y-Y

NOTES:
- BREAK ALL SHARP EDGES
- FOR GENERAL TOLERANCES SEE TABLE (LOC, C2)
- FOR UNDIMENSIONED FEATURES REFER TO CAD ⌓ 0.2
- STAMP DESCRIPTION ON BACK FACE (L FOR ORIGINAL, R FOR SYMOPP)
- ARMS SYMMETRIC ABOUT CENTER

UBRacing	MATERIAL CERTIFICATE REQUIRED DIMENSIONS IN MILIMETRES U.O.S 0 DECIMAL PLACES ±0.50 1 DECIMAL PLACE ±0.25 2 DECIMAL PLACES ±0.10 3 DECIMAL PLACES ±0.02 GENERAL CONCENTRICITY 0.1 TIR ANGULAR TOLERANCE ±0.25°	COMPONENT MASS (kg)	0.211	MATERIAL SPEC	ALUMINIUM 7075
A3 IF IN DOUBT - ASK DO NOT SCALE		DRAWN BY	SW	HEAT TREATMENT	N/A
				SURFACE TREATMENT	N/A
TEL. +44 (0)121 414 4218		APPROVED BY	EC	DESCRIPTION	RLR L/R
E-MAIL. ubracing@gmail.com					
This drawing and the copyright herein are the property of UBRacing. It is private & confidential and is issued on the express condition that it is not modified,copied or communicated to any other party without the written consent of UBRacing.		SCALE	1:1	SHEET 1/1	PART NUMBER UBR28_SU_L_204_02A

REV	DESCRIPTION	INIT	DATE
01A	INITIAL RELEASE	SW	09/01/2025

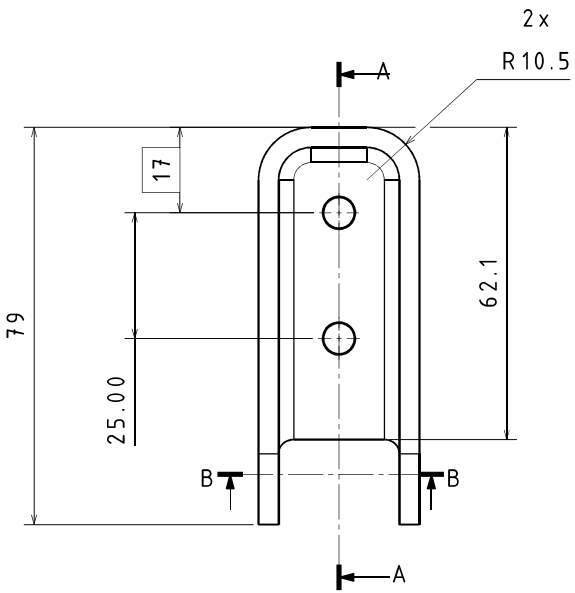

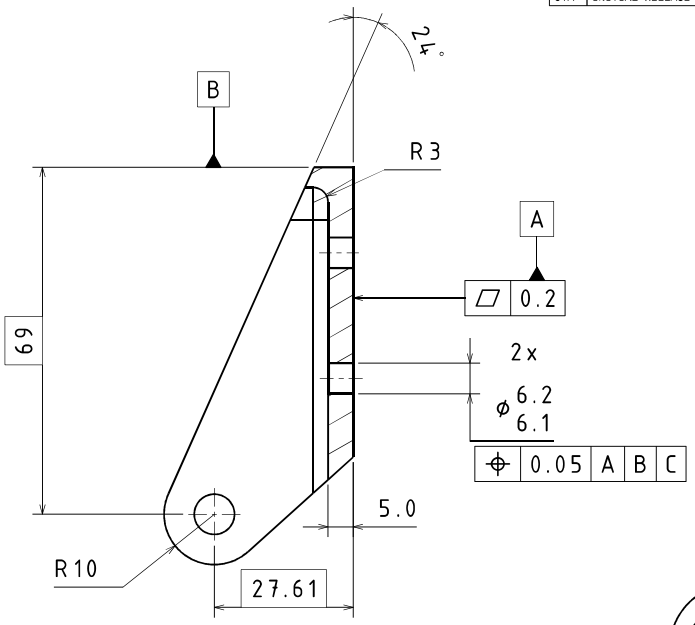

SECTION A-A

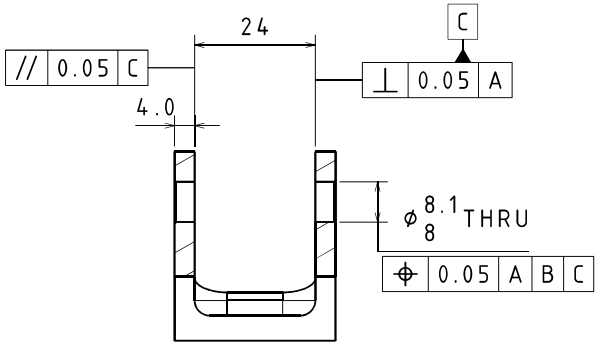

SECTION B-B

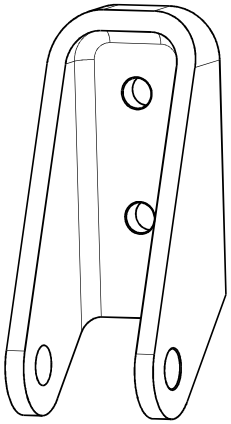

ISOMETRIC VIEW

NOTES
- BREAK ALL SHARP EDGES
- FOR GENERAL TOLERANCES SEE TABLE
- REFER TO CAD
- STAMP DESCRIPTION ON BACK FACE (L FOR ORIGINAL, R FOR SYMOPP)

UBRacing	MATERIAL CERTIFICATE REQUIRED DIMENSIONS IN MILIMETRES U.O.S 0 DECIMAL PLACES ±0.50 1 DECIMAL PLACE ±0.25 2 DECIMAL PLACES ±0.10 3 DECIMAL PLACES ±0.02 GENERAL CONCENTRICITY 0.1 TIR ANGULAR TOLERANCE ±0.25°	COMPONENT MASS (kg) 0.055	MATERIAL SPEC: ALUMINIUM 7075
A3 IF IN DOUBT - ASK DO NOT SCALE		DRAWN BY SW	HEAT TREATMENT: N/A
TEL. +44 (0)121 414 4218		APPROVED BY EC	SURFACE TREATMENT: N/A
E-MAIL. ubracing@gmail.com			DESCRIPTION: RD L/R
		SCALE 1:1	SHEET 1/1 · PART NUMBER UBR28_SU_L_205_01A

This drawing and the copyright herein are the property of UBRacing. It is private & confidential and is issued on the express condition that it is not modified,copied or communicated to any other party without the written consent of UBRacing.

REV	DESCRIPTION	INIT	DATE
01A	INITIAL RELEASE	SW	09/01/2025

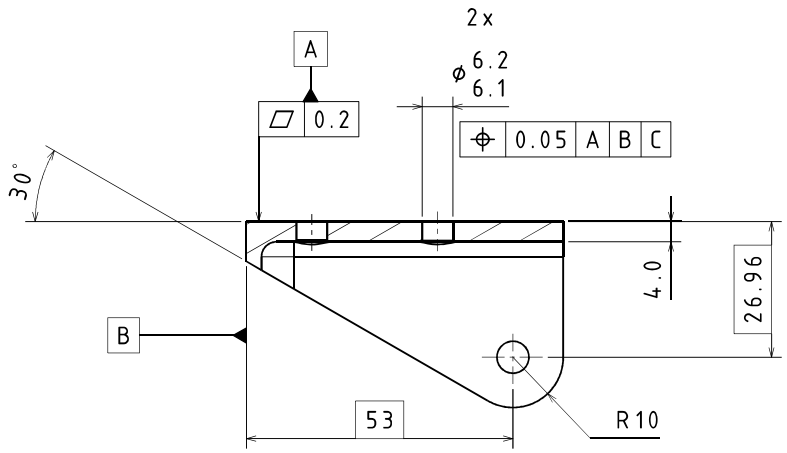

SECTION A-A

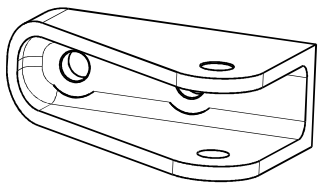

ISOMETRIC VIEW

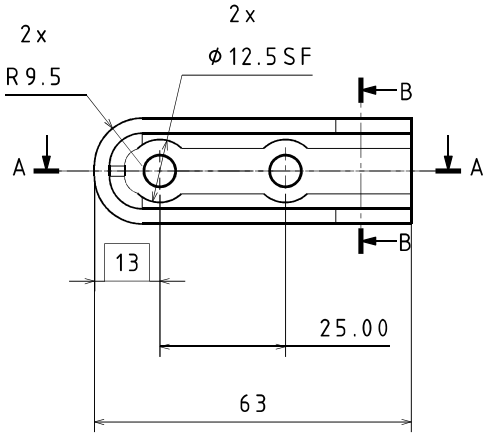

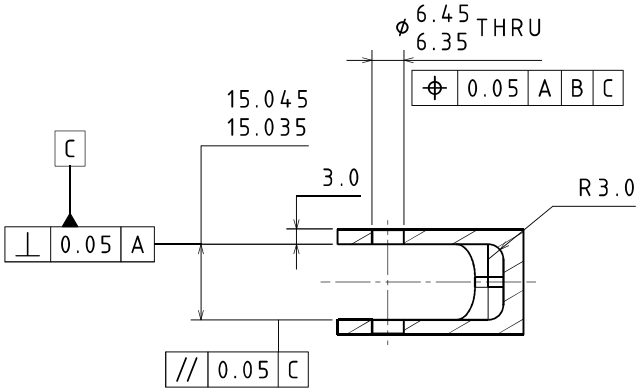

SECTION B-B

NOTES
- BREAK ALL SHARP EDGES
- FOR GENERAL TOLERANCES SEE TABLE
- REFER TO CAD
- STAMP DESCRIPTION ON BACK FACE (L FOR ORIGINAL, R FOR SYMOPP)

UBRacing	MATERIAL CERTIFICATE REQUIRED DIMENSIONS IN MILIMETRES U.O.S 0 DECIMAL PLACES ±0.50 1 DECIMAL PLACE ±0.25 2 DECIMAL PLACES ±0.10 3 DECIMAL PLACES ±0.02 GENERAL CONCENTRICITY 0.1 TIR ANGULAR TOLERANCE ±0.25°	COMPONENT MASS (kg)	0.04	MATERIAL SPEC	ALUMINIUM 7075
A3 IF IN DOUBT - ASK DO NOT SCALE				HEAT TREATMENT	N/A
		DRAWN BY	SW	SURFACE TREATMENT	N/A
TEL. +44 (0)121 414 4218				DESCRIPTION	RUF L/R
E-MAIL. ubracing@gmail.com		APPROVED BY	EC		
This drawing and the copyright herein are the property of UBRacing. It is private & confidential and is issued on the express condition that it is not modified,copied or communicated to any other party without the written consent of UBRacing.		SCALE	1:1	SHEET 1/1	PART NUMBER UBR28_SU_L_201_03B

REV	DESCRIPTION	INIT	DATE
01A	INITIAL RELEASE	AE	25/05/2025
02A	THREAD CHANGED TO 1/2" UNF FOR NEW ROD ENDS	MJD	16/01/2025

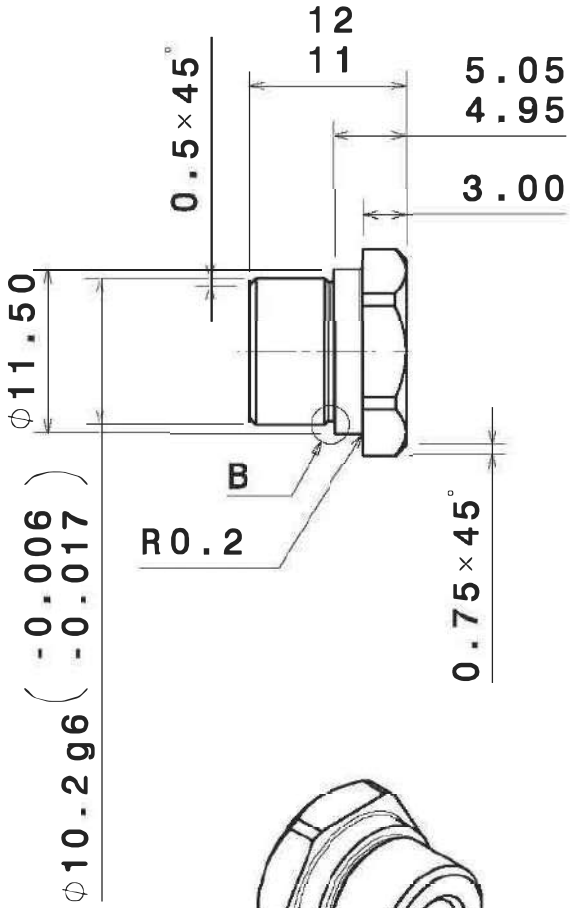

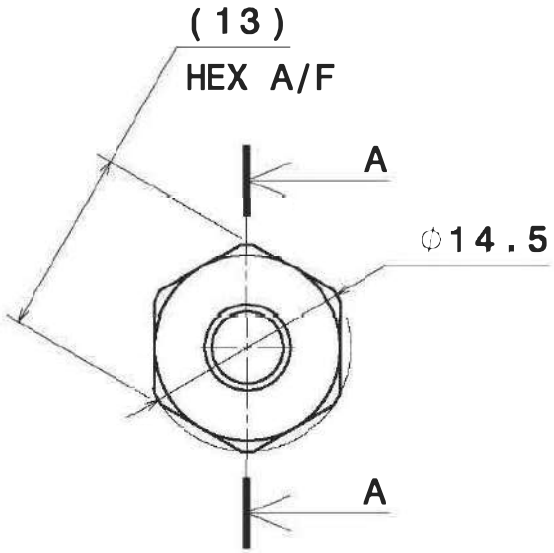

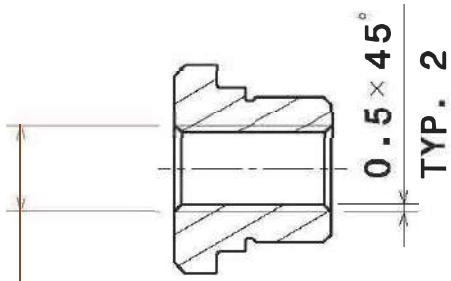

SECTION A-A

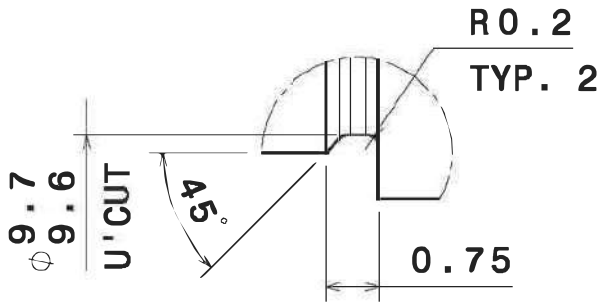

DETAIL B
SCALE: 10:1

ISOMETRIC VIEW

1/4" UNF
THRU
ϕ5.5 TAPPING DRILL

NOTES:
1. MADE FROM 13 MM A/F STEEL HEX BAR
2. TEST FIT IN 1/2" 18 SWG TUBE

UBRacing	MATERIAL CERTIFICATE REQUIRED DIMENSIONS IN MILIMETRES U.O.S	COMPONENT MASS (kg) 0.007	MATERIAL SPEC: EN9A STEEL HEX BAR HEAT TREATMENT: N/A
A4	IF IN DOUBT - ASK DO NOT SCALE	0 DECIMAL PLACES ±0.50 1 DECIMAL PLACE ±0.25 2 DECIMAL PLACES ±0.10 3 DECIMAL PLACES ±0.02 GENERAL CONCENTRICITY 0.1 TIR ANGULAR TOLERANCE ±0.25°	DRAWN BY ANDREW EVANS	SURFACE TREATMENT: N/A DESCRIPTION: HEX INSERT WITH WELDING DIAMETER
TEL.	+44 (0)121 414 4218		
E-MAIL.	ubracing@gmail.com	REMOVE BURRS AND SHARP EDGES	
This drawing and the copyright herein are the property of UBRacing. It is private & confidential and is issued on the express condition that it is not modified, copied or communicated to any other party without the written consent of UBRacing.		SCALE 2:1	SHEET 1/1 · PART NUMBER UBR28_SU_005

REV	DESCRIPTION	INIT	DATE
01A	INITIAL RELEASE	JTB	24/02/2025

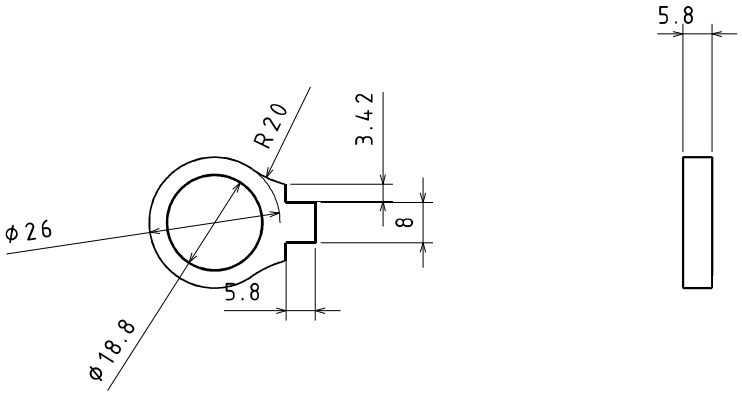

UBRacing	MATERIAL CERTIFICATE REQUIRED DIMENSIONS IN MILIMETRES U.O.S	COMPONENT MASS (kg)	0	MATERIAL SPEC	STEEL S515
				HEAT TREATMENT	N/A
A3	IF IN DOUBT - ASK DO NOT SCALE	DRAWN BY	JTB	SURFACE TREATMENT	N/A
	0 DECIMAL PLACES ±0.50 1 DECIMAL PLACE ±0.25 2 DECIMAL PLACES ±0.10 3 DECIMAL PLACES ±0.02 GENERAL CONCENTRICITY 0.1 TIR ANGULAR TOLERANCE ±0.25°			DESCRIPTION	THIN TONGUE SINGLE BEARING CAGE
TEL.	+44 (0)121 414 4218				
E-MAIL.	ubracing@gmail.com				
	REMOVE BURRS AND SHARP EDGES				
	This drawing and the copyright herein are the property of UBRacing. It is private & confidential and is issued on the express condition that it is not modified,copied or communicated to any other party without the written consent of UBRacing.	SCALE	1:1	SHEET 1/1	PART NUMBER UBR28_SU_125

This drawing and the copyright herein are the property of UBRacing. It is private & confidential and is issued on the express condition that it is not modified,copied or communicated to any other party without the written consent of UBRacing.

REV	DESCRIPTION	INIT	DATE
01A	INITIAL RELEASE	JTB	20/01/2025

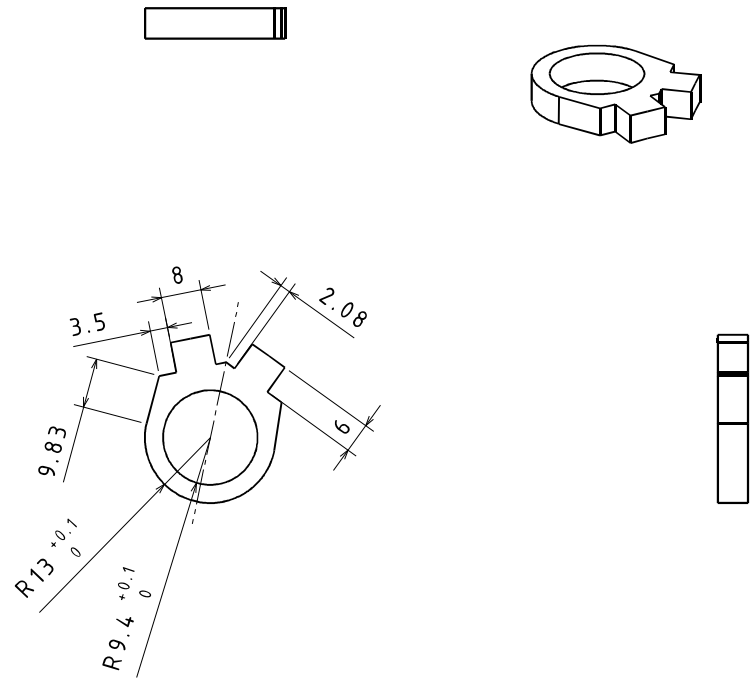

UBRacing

A3

IF IN DOUBT - ASK

DO NOT SCALE

TEL. +44 (0)121 414 4218

E-MAIL. ubracing@gmail.com

MATERIAL CERTIFICATE REQUIRED

DIMENSIONS IN MILIMETRES U.O.S

0 DECIMAL PLACES	±0.50
1 DECIMAL PLACE	±0.25
2 DECIMAL PLACES	±0.10
3 DECIMAL PLACES	±0.02
GENERAL CONCENTRICITY	0.1 TIR
ANGULAR TOLERANCE	±0.25°

REMOVE BURRS AND SHARP EDGES

This drawing and the copyright herein are the property of UBRacing. It is private & confidential and is issued on the express condition that it is not modified,copied or communicated to any other party without the written consent of UBRacing.

COMPONENT MASS (kg)	0
DRAWN BY	JTB
SCALE	1:1
MATERIAL SPEC	STEEL S355
HEAT TREATMENT	N/A
SURFACE TREATMENT	NITROTEC
DESCRIPTION	FRONT UPPER BEARING CAGE
SHEET	1/1
PART NUMBER	UBR28_SU_N_007

REV	DESCRIPTION	INIT	DATE
01A	INITIAL RELEASE	JTB	20/01/2025

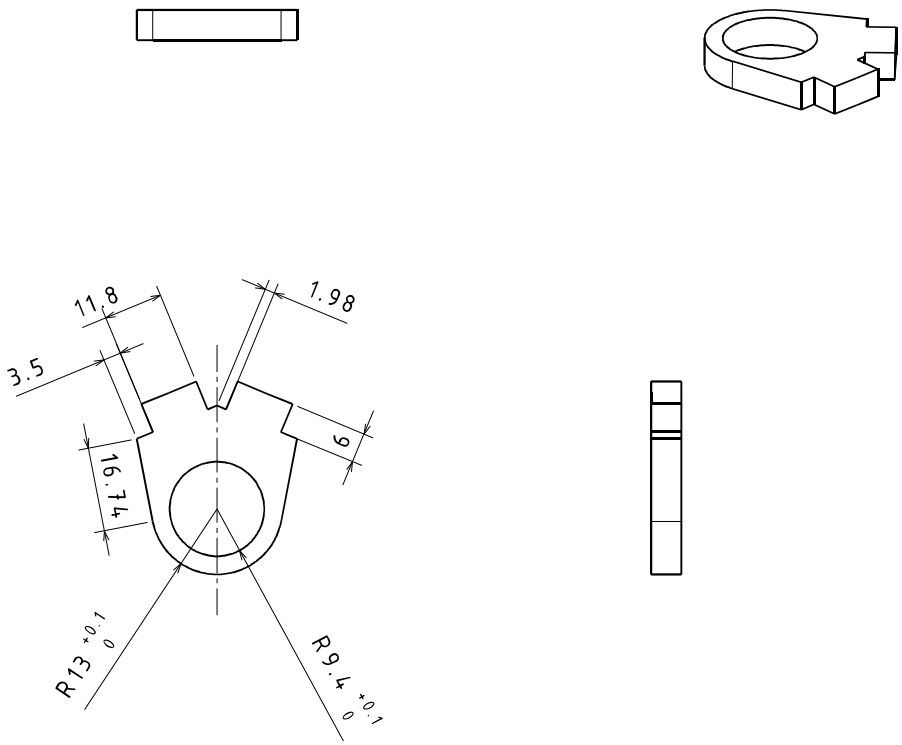

UBRacing

A3

IF IN DOUBT - ASK

DO NOT SCALE

TEL. +44 (0)121 414 4218

E-MAIL. ubracing@gmail.com

MATERIAL CERTIFICATE REQUIRED

DIMENSIONS IN MILIMETRES U.O.S

0 DECIMAL PLACES	±0.50
1 DECIMAL PLACE	±0.25
2 DECIMAL PLACES	±0.10
3 DECIMAL PLACES	±0.02
GENERAL CONCENTRICITY	0.1 TIR
ANGULAR TOLERANCE	±0.25°

REMOVE BURRS AND SHARP EDGES

This drawing and the copyright herein are the property of UBRacing. It is private & confidential and is issued on the express condition that it is not modified,copied or communicated to any other party without the written consent of UBRacing.

COMPONENT MASS (kg)	0
DRAWN BY	JTB
SCALE	1:1
MATERIAL SPEC	STEEL S355
HEAT TREATMENT	N/A
SURFACE TREATMENT	NITROTEC
DESCRIPTION	FRONT LOWER BEARING CAGE
SHEET	1/1
PART NUMBER	UBR28_SU_N_011

REV	DESCRIPTION	INIT	DATE
01A	INITIAL RELEASE	JTB	08/04/25

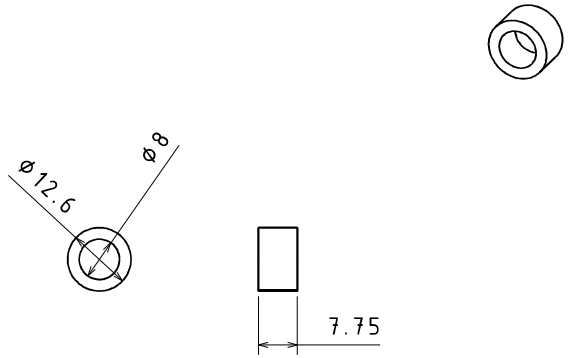

UBRacing

A3

IF IN DOUBT - ASK

DO NOT SCALE

TEL. +44 (0)121 414 4218

E-MAIL. ubracing@gmail.com

MATERIAL CERTIFICATE REQUIRED

DIMENSIONS IN MILIMETRES U.O.S

0 DECIMAL PLACES	±0.50
1 DECIMAL PLACE	±0.25
2 DECIMAL PLACES	±0.10
3 DECIMAL PLACES	±0.02
GENERAL CONCENTRICITY	0.1 TIR
ANGULAR TOLERANCE	±0.25°

REMOVE BURRS AND SHARP EDGES

COMPONENT MASS (kg): 0.020

DRAWN BY: JTB

MATERIAL SPEC: Aluminium 7075T6

HEAT TREATMENT: N/A

SURFACE TREATMENT: N/A

DESCRIPTION: DAMPER CLEVIS SPACER

This drawing and the copyright herein are the property of UBRacing. It is private & confidential and is issued on the express condition that it is not modified,copied or communicated to any other party without the written consent of UBRacing.

SCALE 1:1

SHEET 1/1

PART NUMBER UBR28_SU_N_50

REV	DESCRIPTION	INIT	DATE
01A	INITIAL RELEASE	JTB	02/06/2025

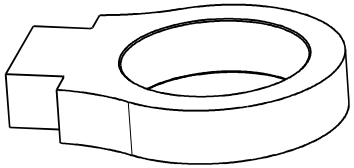

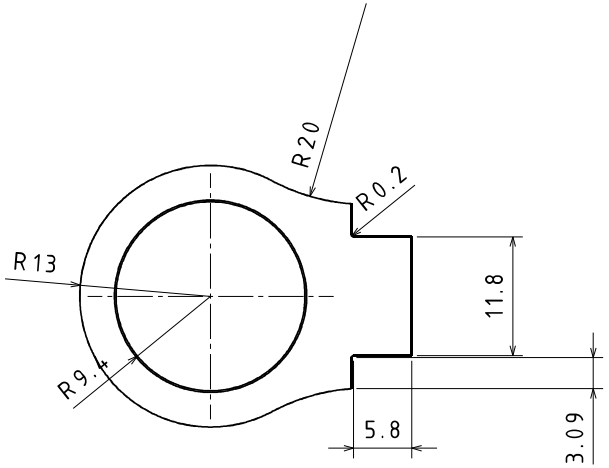

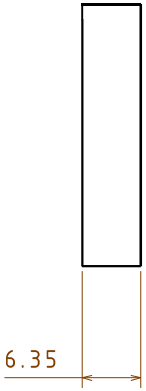

UBRacing

A3

IF IN DOUBT - ASK

DO NOT SCALE

TEL. +44 (0)121 414 4218

E-MAIL. ubracing@gmail.com

MATERIAL CERTIFICATE REQUIRED

DIMENSIONS IN MILIMETRES U.O.S

0 DECIMAL PLACES	±0.50
1 DECIMAL PLACE	±0.25
2 DECIMAL PLACES	±0.10
3 DECIMAL PLACES	±0.02
GENERAL CONCENTRICITY	0.1 TIR
ANGULAR TOLERANCE	±0.25°

REMOVE BURRS AND SHARP EDGES

This drawing and the copyright herein are the property of UBRacing. It is private & confidential and is issued on the express condition that it is not modified,copied or communicated to any other party without the written consent of UBRacing.

COMPONENT MASS (kg)	0	MATERIAL SPEC	S515 STEEL
		HEAT TREATMENT	
DRAWN BY	JTB	SURFACE TREATMENT	
		DESCRIPTION	THICK TONGUE BEARING CAGE
SCALE	2:1	SHEET 1/1	PART NUMBER UBR28_SU_N_105

REV	DESCRIPTION	INIT	DATE
01A	INITIAL RELEASE	EPC	02/06/2025

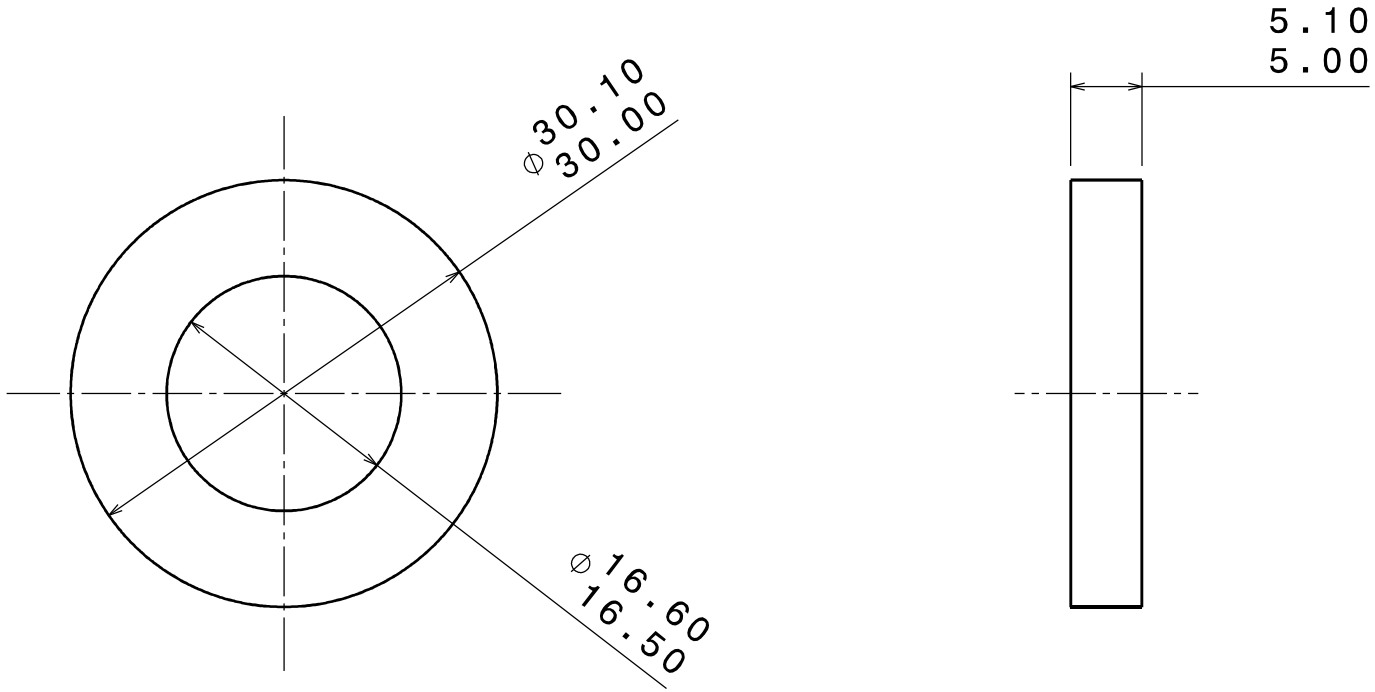

UBRacing

A4

IF IN DOUBT - ASK

DO NOT SCALE

TEL. +44 (0)121 414 4218

E-MAIL. ubracing@gmail.com

MATERIAL CERTIFICATE REQUIRED

DIMENSIONS IN MILIMETRES U.O.S

0 DECIMAL PLACES	±0.50
1 DECIMAL PLACE	±0.25
2 DECIMAL PLACES	±0.10
3 DECIMAL PLACES	±0.02
GENERAL CONCENTRICITY	0.1 TIR
ANGULAR TOLERANCE	±0.25°

REMOVE BURRS AND SHARP EDGES

This drawing and the copyright herein are the property of UBRacing. It is private & confidential and is issued on the express condition that it is not modified, copied or communicated to any other party without the written consent of UBRacing.

COMPONENT MASS (kg)	0.001
DRAWN BY	EPC
SCALE	2:1
MATERIAL SPEC	ALUMINIUM
HEAT TREATMENT	N/A
SURFACE TREATMENT	N/A
DESCRIPTION	TIE ROD SPACER
SHEET	1/1
PART NUMBER	UBR28_SU_N_125

REV	DESCRIPTION	INIT	DATE
01A	INITIAL RELEASE	SW	28/01/2025

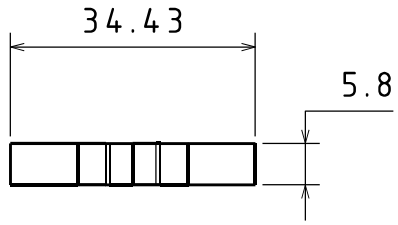

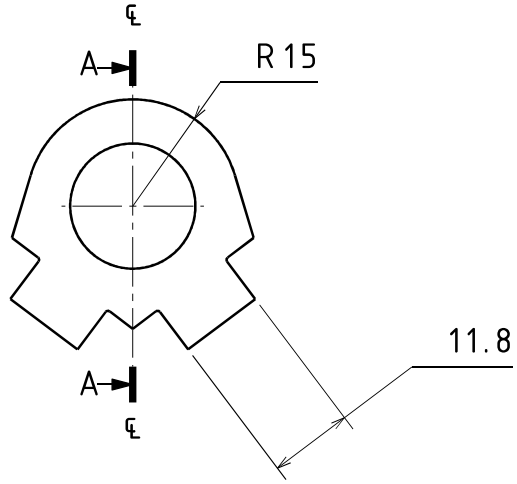

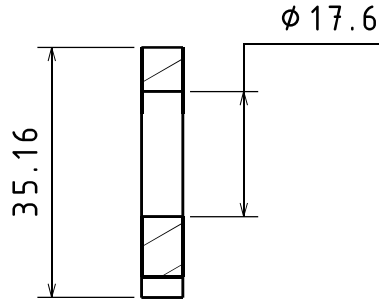

SECTION A-A

UBRacing	MATERIAL CERTIFICATE REQUIRED DIMENSIONS IN MILIMETRES U.O.S	COMPONENT MASS (kg)	0.03	MATERIAL SPEC	S515 SHEET STEEL
				HEAT TREATMENT	N/A
A4	IF IN DOUBT - ASK DO NOT SCALE	DRAWN BY	SW	SURFACE TREATMENT	N/A
	0 DECIMAL PLACES ±0.50 1 DECIMAL PLACE ±0.25 2 DECIMAL PLACES ±0.10 3 DECIMAL PLACES ±0.02 GENERAL CONCENTRICITY 0.1 TIR ANGULAR TOLERANCE ±0.25°			DESCRIPTION	REAR UPPER OB BEARING CAGE
TEL.	+44 (0)121 414 4218				
E-MAIL.	ubracing@gmail.com				
	REMOVE BURRS AND SHARP EDGES				
		SCALE	1:1	SHEET 1/1	PART NUMBER UBR28_SU_212

This drawing and the copyright herein are the property of UBRacing. It is private & confidential and is issued on the express condition that it is not modified, copied or communicated to any other party without the written consent of UBRacing.

REV	DESCRIPTION	INIT	DATE
01A	INITIAL RELEASE	SW	28/01/2025

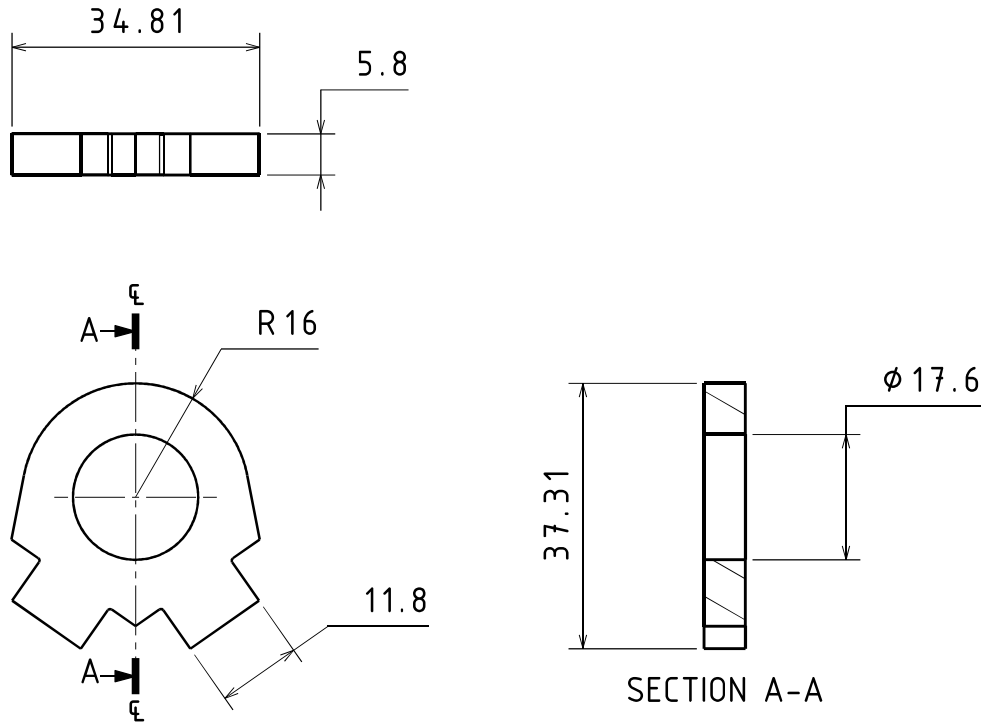

UBRacing	MATERIAL CERTIFICATE REQUIRED DIMENSIONS IN MILIMETRES U.O.S	COMPONENT MASS (kg)	0.03	MATERIAL SPEC	S515 SHEET STEEL
				HEAT TREATMENT	N/A
A4	IF IN DOUBT - ASK DO NOT SCALE	DRAWN BY	SW	SURFACE TREATMENT	N/A
	0 DECIMAL PLACES ±0.50 1 DECIMAL PLACE ±0.25 2 DECIMAL PLACES ±0.10 3 DECIMAL PLACES ±0.02 GENERAL CONCENTRICITY 0.1 TIR ANGULAR TOLERANCE ±0.25° REMOVE BURRS AND SHARP EDGES			DESCRIPTION	REAR LOWER OB BEARING CAGE
TEL.	+44 (0)121 414 4218				
E-MAIL.	ubracing@gmail.com				
		SCALE	1:1	SHEET 1/1	PART NUMBER UBR28_SU_222

This drawing and the copyright herein are the property of UBRacing. It is private & confidential and is issued on the express condition that it is not modified, copied or communicated to any other party without the written consent of UBRacing.

REV	DESCRIPTION	INIT	DATE
01A	INITIAL RELEASE	EPC	13/03/2025

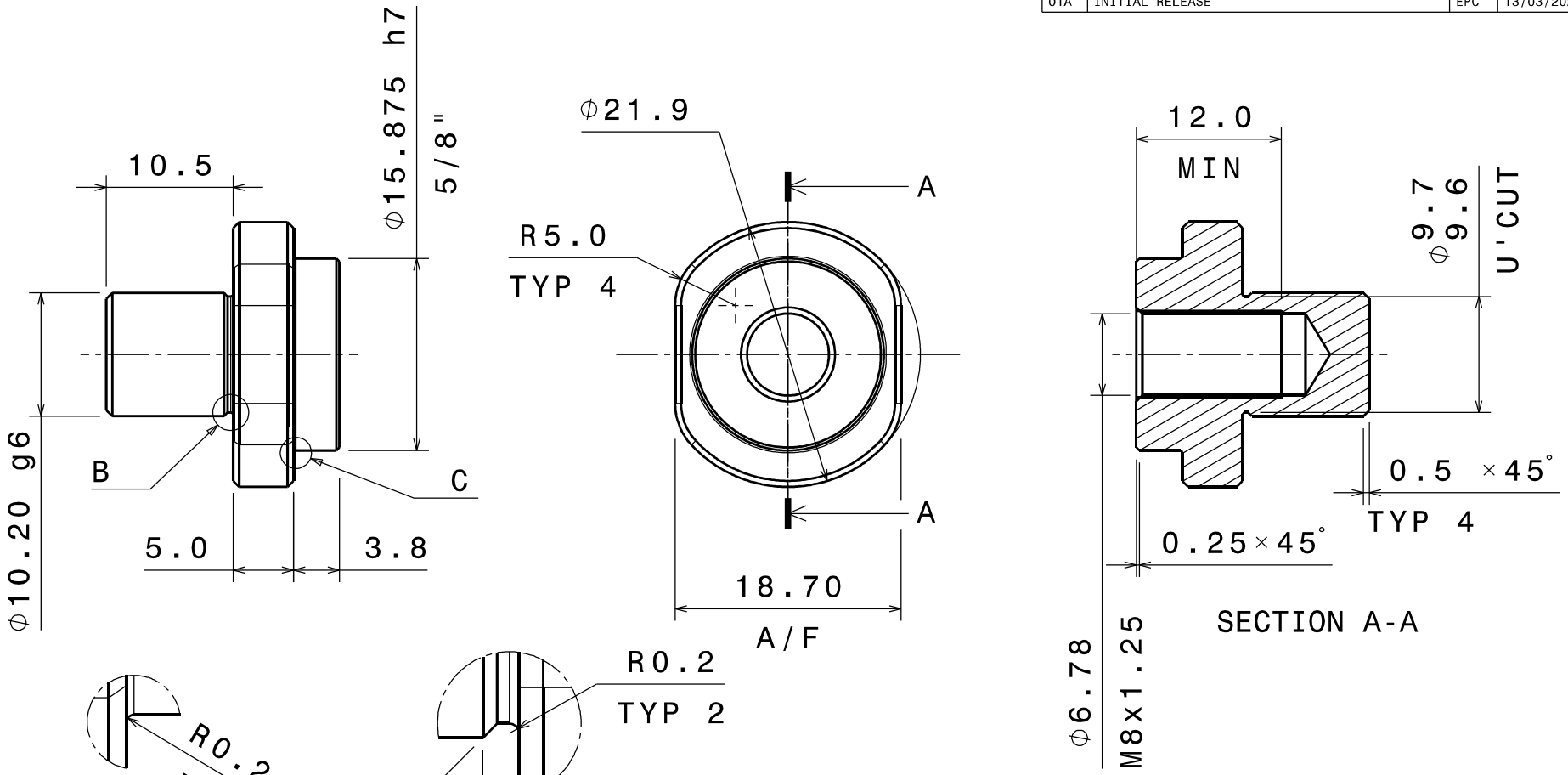

NOTES:
1. TEST FIT IN 1/2" 18 SWG TUBE
2. TEST FIT INTO DAMPER FLANGE

UBRacing	MATERIAL CERTIFICATE REQUIRED DIMENSIONS IN MILIMETRES U.O.S	COMPONENT MASS (kg)	0.022	MATERIAL SPEC	T45 STEEL
				HEAT TREATMENT	N/A
A4	IF IN DOUBT - ASK DO NOT SCALE	DRAWN BY	EPC	SURFACE TREATMENT	N/A
TEL.	+44 (0)121 414 4218			DESCRIPTION	UBR28 DAMPER TO TUBE ADAPTOR
E-MAIL.	ubracing@gmail.com				
	REMOVE BURRS AND SHARP EDGES	SCALE	2:1	SHEET 1/1	PART NUMBER UBR28_SU_N_235

0 DECIMAL PLACES	±0.50
1 DECIMAL PLACE	±0.25
2 DECIMAL PLACES	±0.10
3 DECIMAL PLACES	±0.02
GENERAL CONCENTRICITY	0.1 TIR
ANGULAR TOLERANCE	±0.25°

This drawing and the copyright herein are the property of UBRacing. It is private & confidential and is issued on the express condition that it is not modified, copied or communicated to any other party without the written consent of UBRacing.

REV	DESCRIPTION	INIT	DATE
01A	INITIAL RELEASE	SW	28/01/2025

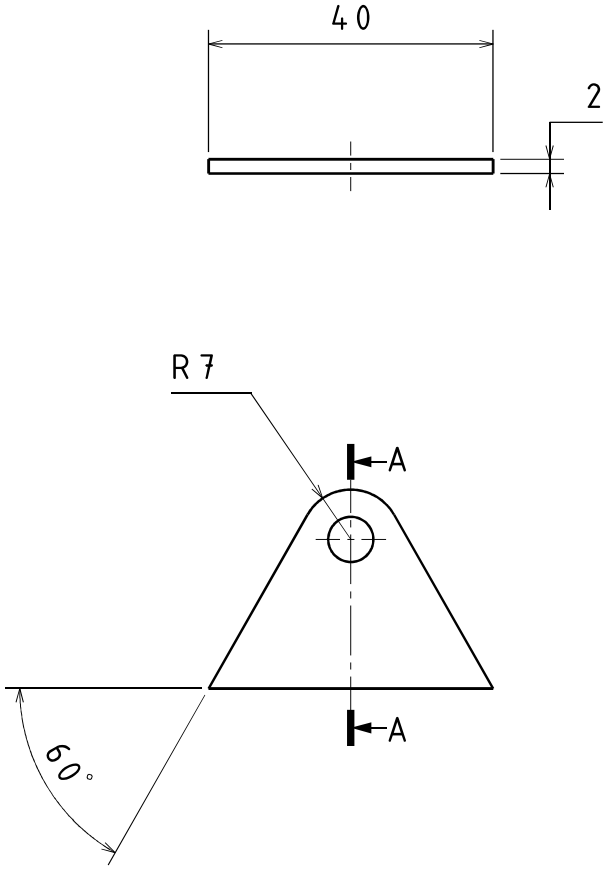

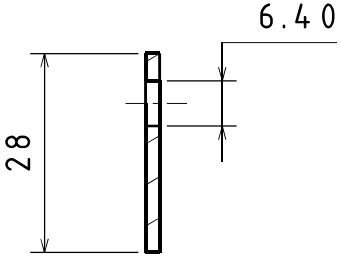

SECTION A-A

UBRacing	MATERIAL CERTIFICATE REQUIRED DIMENSIONS IN MILIMETRES U.O.S	COMPONENT MASS (kg)	0.019	MATERIAL SPEC	S515 SHEET STEEL
				HEAT TREATMENT	N/A
A4	IF IN DOUBT - ASK DO NOT SCALE	DRAWN BY	SW	SURFACE TREATMENT	N/A
	0 DECIMAL PLACES ±0.50 1 DECIMAL PLACE ±0.25 2 DECIMAL PLACES ±0.10 3 DECIMAL PLACES ±0.02 GENERAL CONCENTRICITY 0.1 TIR ANGULAR TOLERANCE ±0.25° REMOVE BURRS AND SHARP EDGES			DESCRIPTION	DAMPER ROD TAB
TEL.	+44 (0)121 414 4218				
E-MAIL.	ubracing@gmail.com				
		SCALE	1:1	SHEET 1/1	PART NUMBER UBR28_SU_N_126

This drawing and the copyright herein are the property of UBRacing. It is private & confidential and is issued on the express condition that it is not modified, copied or communicated to any other party without the written consent of UBRacing.

REV	DESCRIPTION	INIT	DATE
01A	INITIAL RELEASE	SW	28/01/2025

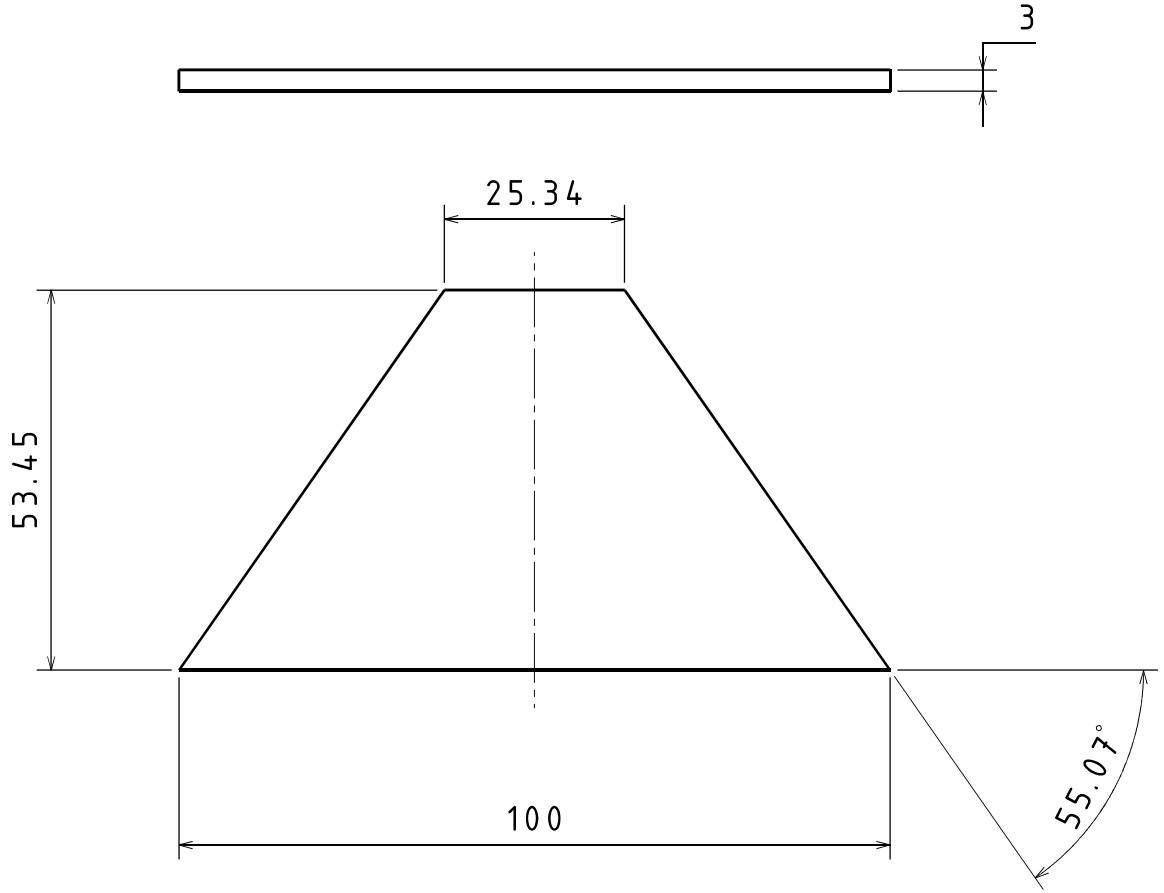

UBRacing	MATERIAL CERTIFICATE REQUIRED DIMENSIONS IN MILIMETRES U.O.S	COMPONENT MASS (kg)	0.050	MATERIAL SPEC	S515 SHEET STEEL
				HEAT TREATMENT	N/A
A4	IF IN DOUBT - ASK DO NOT SCALE	DRAWN BY SW		SURFACE TREATMENT	N/A
	0 DECIMAL PLACES ±0.50 1 DECIMAL PLACE ±0.25 2 DECIMAL PLACES ±0.10 3 DECIMAL PLACES ±0.02 GENERAL CONCENTRICITY 0.1 TIR ANGULAR TOLERANCE ±0.25° REMOVE BURRS AND SHARP EDGES			DESCRIPTION	REAR LOWER GUSSET
TEL.	+44 (0)121 414 4218				
E-MAIL.	ubracing@gmail.com				
This drawing and the copyright herein are the property of UBRacing. It is private & confidential and is issued on the express condition that it is not modified, copied or communicated to any other party without the written consent of UBRacing.		SCALE	1:1	SHEET 1/1	PART NUMBER UBR28_SU_225

REV	DESCRIPTION	INIT	DATE
01A	INITIAL RELEASE	SW	20/10/2024

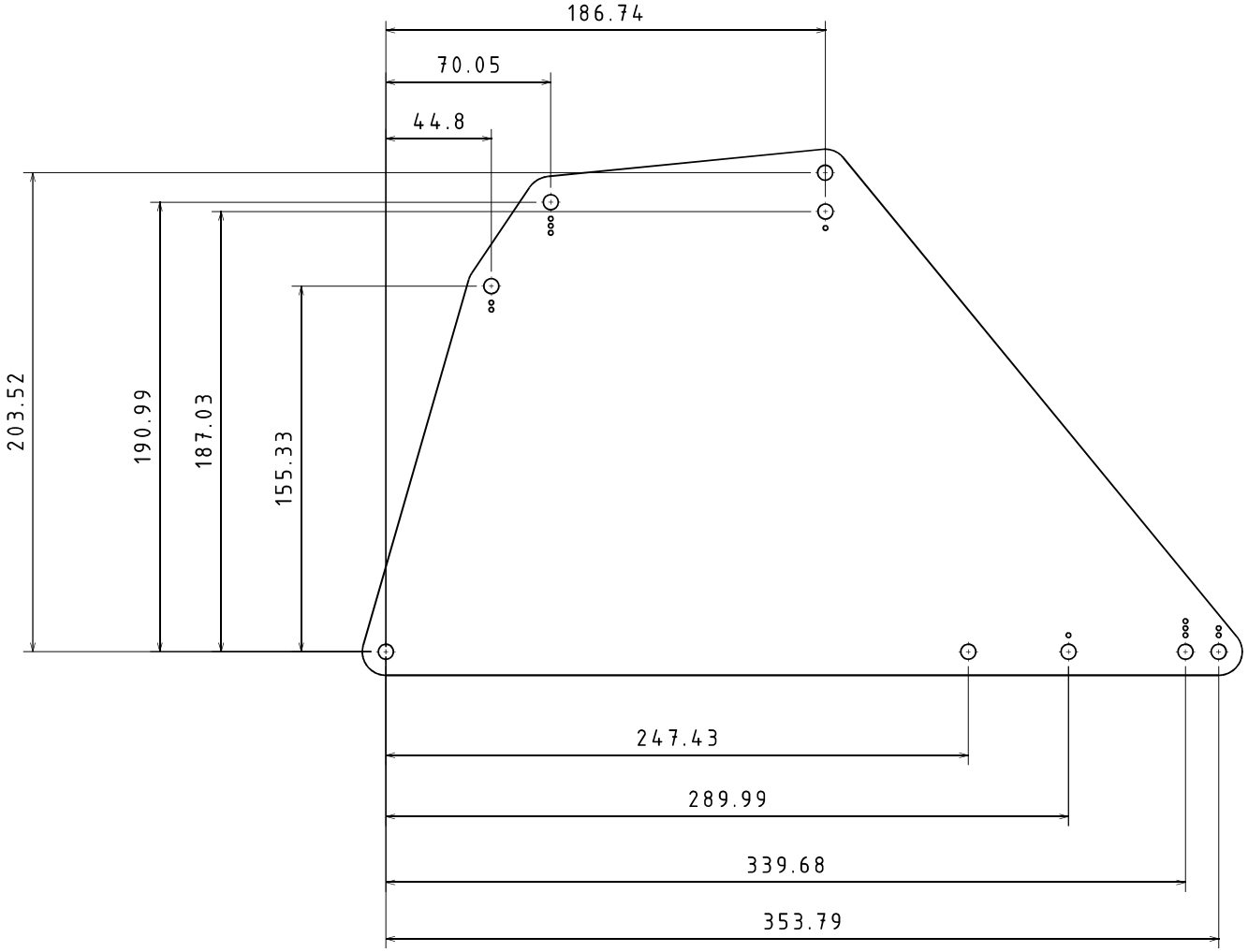

UBRacing

A3

IF IN DOUBT - ASK

DO NOT SCALE

TEL. +44 (0)121 414 4218

E-MAIL. ubracing@gmail.com

MATERIAL CERTIFICATE REQUIRED

DIMENSIONS IN MILIMETRES U.O.S

0 DECIMAL PLACES	±0.50
1 DECIMAL PLACE	±0.25
2 DECIMAL PLACES	±0.10
3 DECIMAL PLACES	±0.02
GENERAL CONCENTRICITY	0.1 TIR
ANGULAR TOLERANCE	±0.25°

REMOVE BURRS AND SHARP EDGES

This drawing and the copyright herein are the property of UBRacing. It is private & confidential and is issued on the express condition that it is not modified,copied or communicated to any other party without the written consent of UBRacing.

COMPONENT MASS (kg)	0.000
DRAWN BY	SW
SCALE	1:1
MATERIAL SPEC	S335
HEAT TREATMENT	N/A
SURFACE TREATMENT	N/A
DESCRIPTION	WISHBONE JIG
SHEET	1/1
PART NUMBER	UBR28_SU_N_999

REV	DESCRIPTION	INIT	DATE
01A	INITIAL RELEASE	SW	28/01/2025

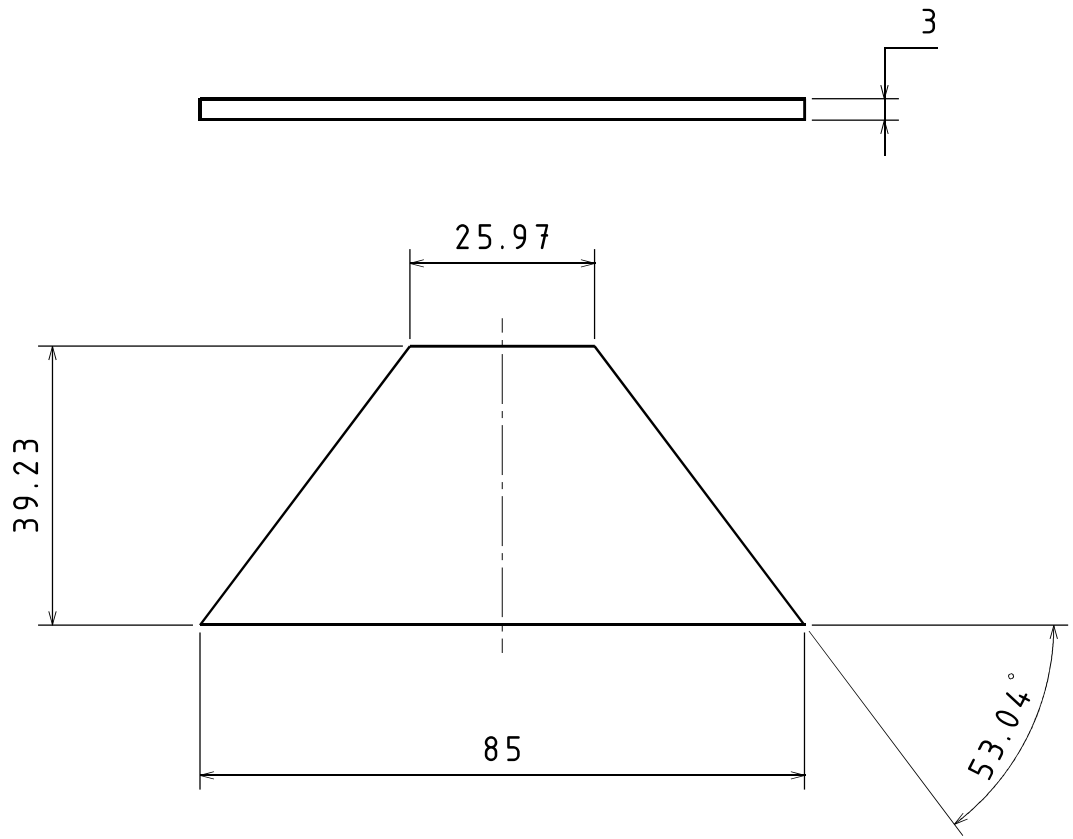

UBRacing	MATERIAL CERTIFICATE REQUIRED DIMENSIONS IN MILIMETRES U.O.S	COMPONENT MASS (kg)	0.050	MATERIAL SPEC	S515 SHEET STEEL
				HEAT TREATMENT	N/A
A4	IF IN DOUBT - ASK DO NOT SCALE	DRAWN BY SW		SURFACE TREATMENT	N/A
	0 DECIMAL PLACES ±0.50 1 DECIMAL PLACE ±0.25 2 DECIMAL PLACES ±0.10 3 DECIMAL PLACES ±0.02 GENERAL CONCENTRICITY 0.1 TIR ANGULAR TOLERANCE ±0.25° REMOVE BURRS AND SHARP EDGES			DESCRIPTION	REAR UPPER GUSSET
TEL.	+44 (0)121 414 4218				
E-MAIL.	ubracing@gmail.com				
This drawing and the copyright herein are the property of UBRacing. It is private & confidential and is issued on the express condition that it is not modified, copied or communicated to any other party without the written consent of UBRacing.		SCALE	1:1	SHEET 1/1	PART NUMBER UBR28_SU_215

REV	DESCRIPTION	INIT	DATE
01A	INITIAL RELEASE	EPC	27/04/2022

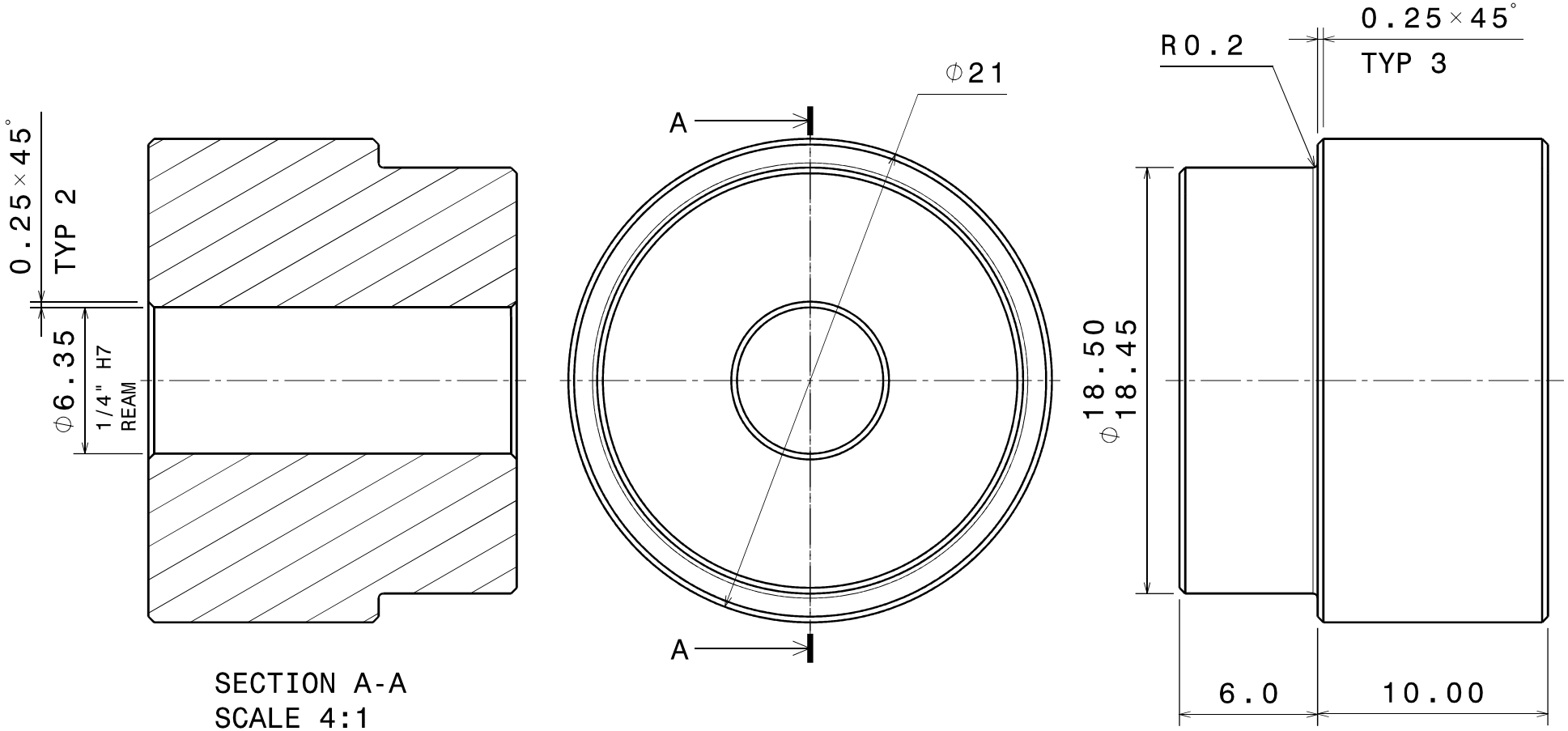

SECTION A-A
SCALE 4:1

NOTE: TEST FIT BEARING CAGE INTO LASER CUT BLANK

UBRacing	MATERIAL CERTIFICATE REQUIRED DIMENSIONS IN MILIMETRES U.O.S	COMPONENT MASS (kg)	0.012	MATERIAL SPEC	6065 ALUMINIUM
				HEAT TREATMENT	N/A
A4	IF IN DOUBT - ASK DO NOT SCALE	DRAWN BY	EPC	SURFACE TREATMENT	N/A
TEL.	+44 (0)121 414 4218			DESCRIPTION	WISHBONE JIG CAGE SPACER
E-MAIL.	ubracing@gmail.com				
	REMOVE BURRS AND SHARP EDGES	SCALE	4:1	SHEET 1/1	PART NUMBER UBR25_SU_100R02_01A

0 DECIMAL PLACES ±0.50
1 DECIMAL PLACE ±0.25
2 DECIMAL PLACES ±0.10
3 DECIMAL PLACES ±0.02
GENERAL CONCENTRICITY 0.1 TIR
ANGULAR TOLERANCE ±0.25°

This drawing and the copyright herein are the property of UBRacing. It is private & confidential and is issued on the express condition that it is not modified, copied or communicated to any other party without the written consent of UBRacing.

REV	DESCRIPTION	INIT	DATE
01A	INITIAL RELEASE	JTB	02/06/2024

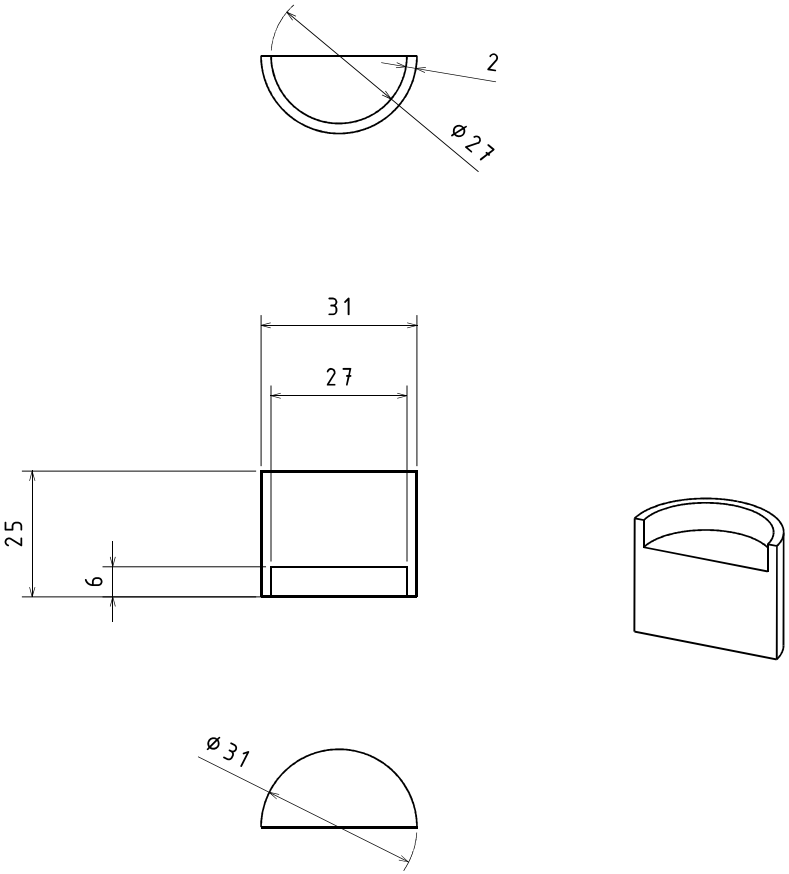

UBRacing

A3

IF IN DOUBT - ASK

DO NOT SCALE

TEL. +44 (0)121 414 4218

E-MAIL. ubracing@gmail.com

MATERIAL CERTIFICATE REQUIRED

DIMENSIONS IN MILIMETRES U.O.S

0 DECIMAL PLACES	±0.50
1 DECIMAL PLACE	±0.25
2 DECIMAL PLACES	±0.10
3 DECIMAL PLACES	±0.02
GENERAL CONCENTRICITY	0.1 TIR
ANGULAR TOLERANCE	±0.25°

REMOVE BURRS AND SHARP EDGES

This drawing and the copyright herein are the property of UBRacing. It is private & confidential and is issued on the express condition that it is not modified,copied or communicated to any other party without the written consent of UBRacing.

COMPONENT MASS (kg): 0

DRAWN BY: JTB

SCALE: 1:1

MATERIAL SPEC: ALLUMINIUM 6065

HEAT TREATMENT:

SURFACE TREATMENT:

DESCRIPTION: REAM SPACER

SHEET 1/1

PART NUMBER: UBR27_SU_N_54

REV	DESCRIPTION	INIT	DATE
01A	INITIAL RELEASE		

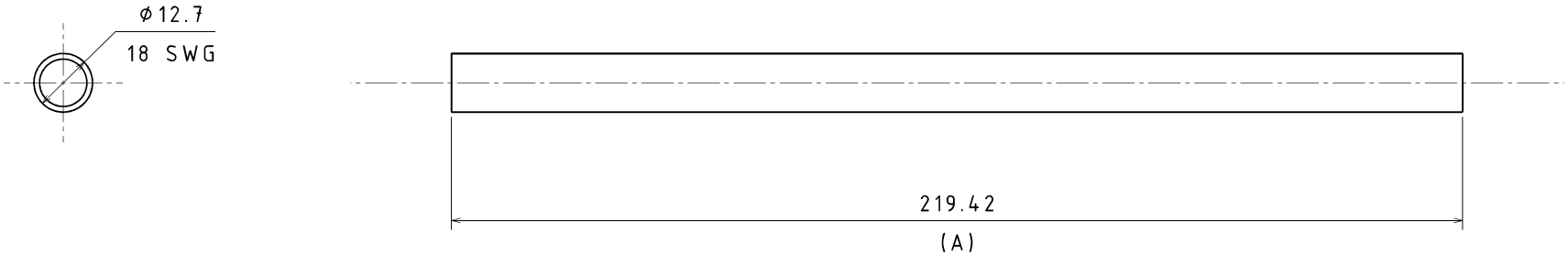

PART NUMBER	LENGTH (A)	QUANTITY	PART
UBR28_SU_N_113	219.41	2	FUWB FWD
UBR28_SU_N_114	248.10	2	FUWB RWD
UBR28_SU_N_133	259.01	2	FTR
UBR28_SU_N_141_01A	142.3	2	FDR (SHORT)
UBR28_SU_N_141_02A	167.96	2	FDR (LONG)
UBR28_SU_N_233	167.96	2	RTR
UBR28_SU_N_241_01A	92.28	2	RDR (SHORT)
UBR28_SU_N_241_02A	102.28	2	RDR (LONG)

NOTES:
- 0.5' OD, 18SWG TUBE
- HACKSAW OVERSIZED THEN TURN ON LATHE
- DEBUR POST MACHINING

UBRacing

A3

IF IN DOUBT - ASK

DO NOT SCALE

TEL. +44 (0)121 414 4218
E-MAIL. ubracing@gmail.com

MATERIAL CERTIFICATE REQUIRED

DIMENSIONS IN MILIMETRES U.O.S

0 DECIMAL PLACES	±0.50
1 DECIMAL PLACE	±0.25
2 DECIMAL PLACES	±0.10
3 DECIMAL PLACES	±0.02
GENERAL CONCENTRICITY	0.1 TIR
ANGULAR TOLERANCE	±0.25°

REMOVE BURRS AND SHARP EDGES

COMPONENT MASS (kg): N/A

DRAWN BY: SW

MATERIAL SPEC: T45 STEEL

HEAT TREATMENT: N/A

SURFACE TREATMENT: N/A

DESCRIPTION: 0.5' TUBE SHEET

SCALE: 1:1

SHEET: 1/1

PART NUMBER: UBR28_SU

This drawing and the copyright herein are the property of UBRacing. It is private & confidential and is issued on the express condition that it is not modified,copied or communicated to any other party without the written consent of UBRacing.

REV	DESCRIPTION	INIT	DATE
01A	INITIAL RELEASE		

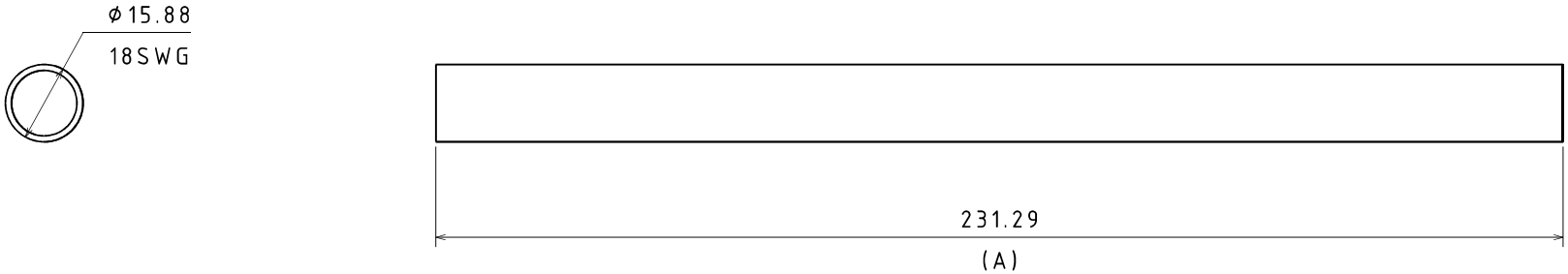

PART NUMBER	LENGTH (A)	QUANTITY	PART
UBR28_SU_N_123	231.29	2	FLWB FWD
UBR28_SU_N_124	256.985	2	FLWB RWD
UBR28_SU_N_213	326.00	2	RUWB FWD
UBR28_SU_N_214	133.873	2	RUWB RWD
UBR28_SU_N_223	310.81	2	RLWB FWD
UBR28_SU_N_224	174.563	2	RLWB RWD

NOTES:
- 0.625' OD, 18SWG TUBE
- HACKSAW OVERSIZED THEN TURN ON LATHE
- DEBUR POST MACHINING

UBRacing

A3

IF IN DOUBT - ASK

DO NOT SCALE

TEL. +44 (0)121 414 4218

E-MAIL. ubracing@gmail.com

MATERIAL CERTIFICATE REQUIRED

DIMENSIONS IN MILIMETRES U.O.S

0 DECIMAL PLACES	±0.50
1 DECIMAL PLACE	±0.25
2 DECIMAL PLACES	±0.10
3 DECIMAL PLACES	±0.02
GENERAL CONCENTRICITY	0.1 TIR
ANGULAR TOLERANCE	±0.25°

REMOVE BURRS AND SHARP EDGES

COMPONENT MASS (kg): N/A

DRAWN BY: SW

MATERIAL SPEC: T45 STEEL

HEAT TREATMENT: N/A

SURFACE TREATMENT: N/A

DESCRIPTION: 0.625' OD TUBE SHEET

SCALE: 1:1

SHEET: 1/1

PART NUMBER: UBR28_SU

This drawing and the copyright herein are the property of UBRacing. It is private & confidential and is issued on the express condition that it is not modified,copied or communicated to any other party without the written consent of UBRacing.

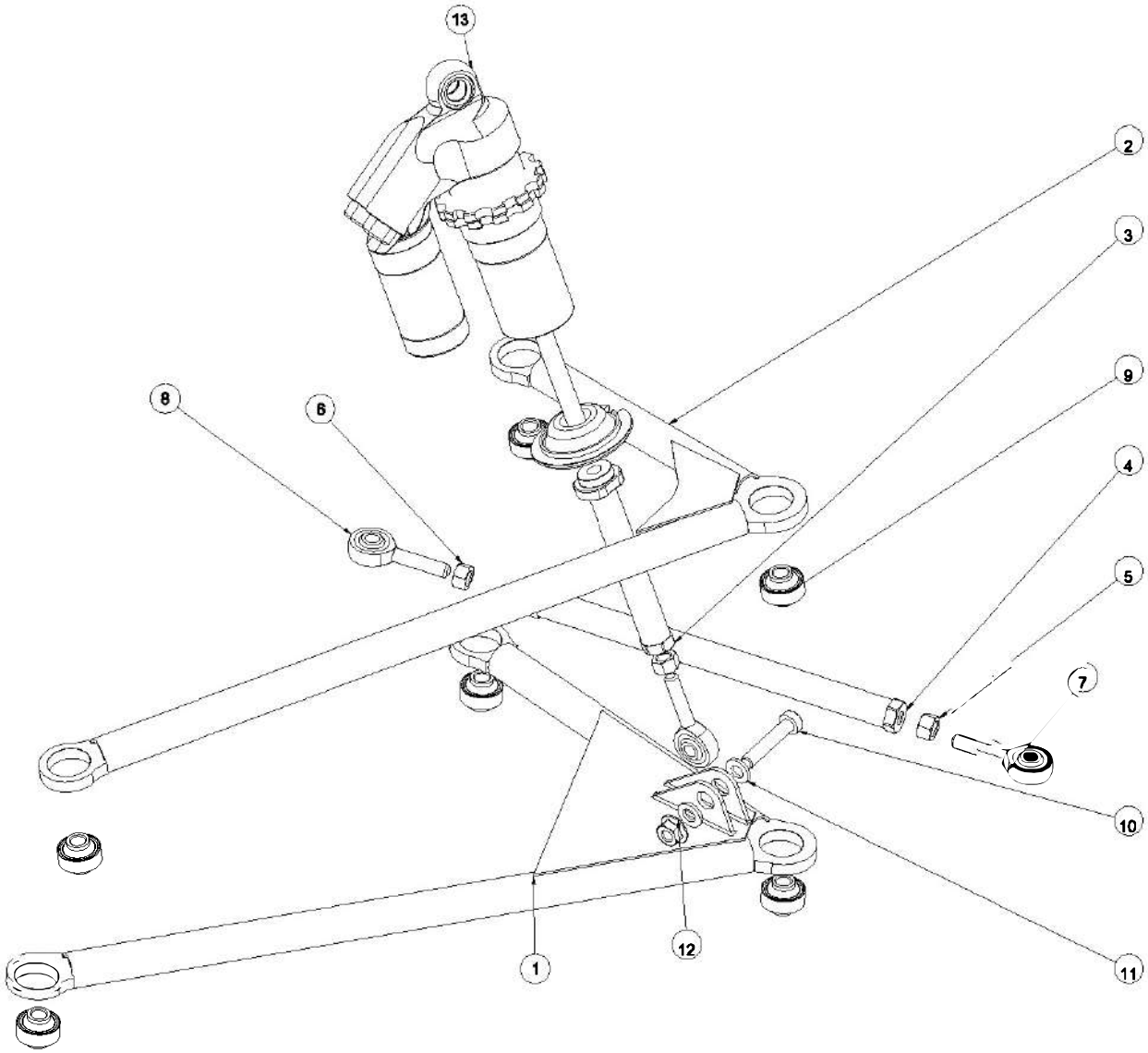

PARTS LIST			
ITEM	QTY	PART NUMBER	DESCRIPTION
1	1	UBR28_SU_L_410	LOWER WISHBONE ASSY
2	1	UBR28_SU_L_420	UPPER WISHBONE ASSY
3	1	UBR28_SU_L_430	REAR PUSH ROD
4	1	UBR28_SU_L_450	REAR TIE ROD
5	2		3/4" PLAIN RH NUT
6	1		3/4" PLAIN LH NUT
7	2	AM-T	3/4" RH ROD END
8	1	AB-T	3/4" LH ROD END
9	6	BRGSP-001 HAB-4TG	SPHERICAL BEARING
10	1		3/4" X 30 CH UNF
11	2		3/4" WASHER
12	1		3/4" NYLOCK TYPE P
13	1	TTX25	OHLINS DAMPER

NOTES:
* APPLY BEARING RETAINER
* APPLY COPPER SLIP TO THE THREAD

UBRacing

A1 DO NOT SCALE

TEL: +44 (0)121 414 4216

E-MAIL: ubracing@bham.ac.uk

DRAWN BY: JTB

SCALE: 1:1

DESCRIPTION: REAR LEFT SUSPENSION ASSEMBLY

N/A

N/A

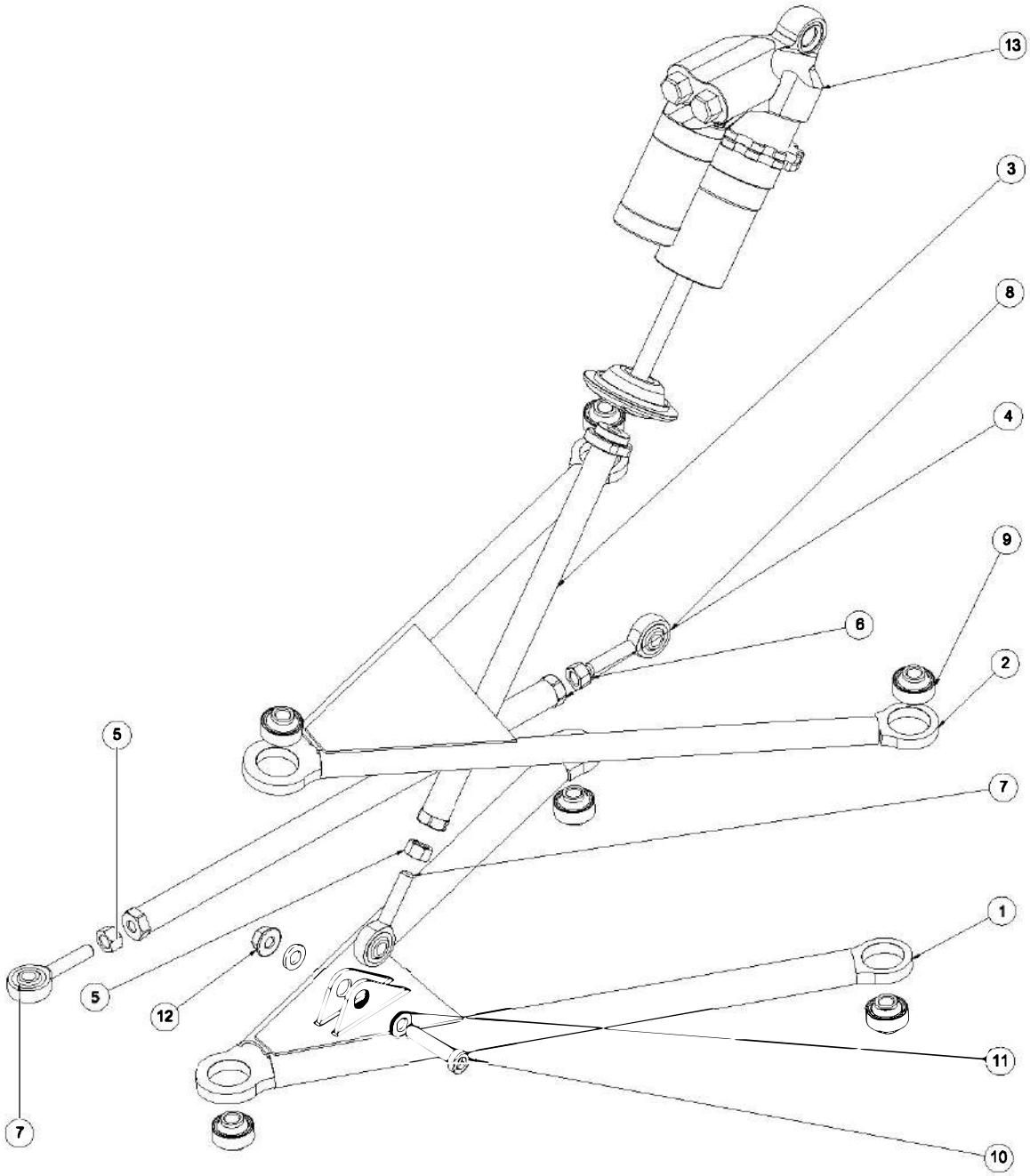

PARTS LIST			
ITEM	QTY	PART NUMBER	DESCRIPTION
1	1	UBR28_SU_L_510	LOWER WISHBONE ASSY
2	1	UBR28_SU_L_520	UPPER WISHBONE ASSY
3	1	UBR28_SU_L_530	FRONT PUSH ROD
4	1	UBR28_SU_L_540	FRONT TIE ROD
5	2		¾" PLAIN RH NUT
6	1		¾" PLAIN LH NUT
7	2	AM-T	¾" RH ROD END
8	1	AB-T	¾" LH ROD END
9	6	BRGSP-001 HAB-4TG	SPHERICAL BEARING
10	1		¾" X 30 CH UNF
11	2		¾" WASHER
12	1		¾" NYLOCK TYPE P
13	1	TTX25	OHLINS DAMPER

NOTES:
* APPLY BEARING RETAINER
* APPLY COPPER SLIP TO THE THREAD

UBRacing

A1 DO NOT SCALE

DRAWN BY: JTB

SCALE: 1:1

FRONT LEFT SUSPENSION ASSEMBLY

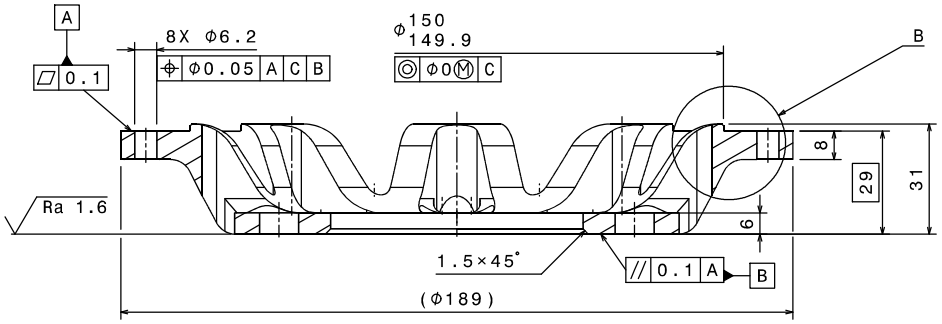

Section view A-A

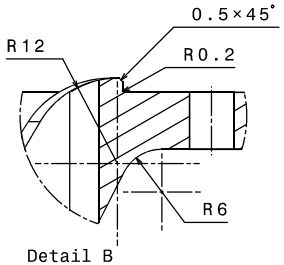

Detail B
Scale: 2:1
OCCURING IN 8 POSITIONS

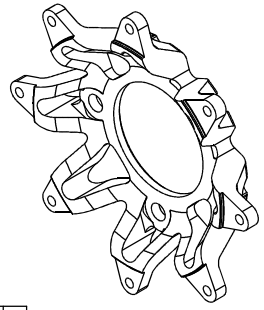

Isometric view
Scale: 1:2

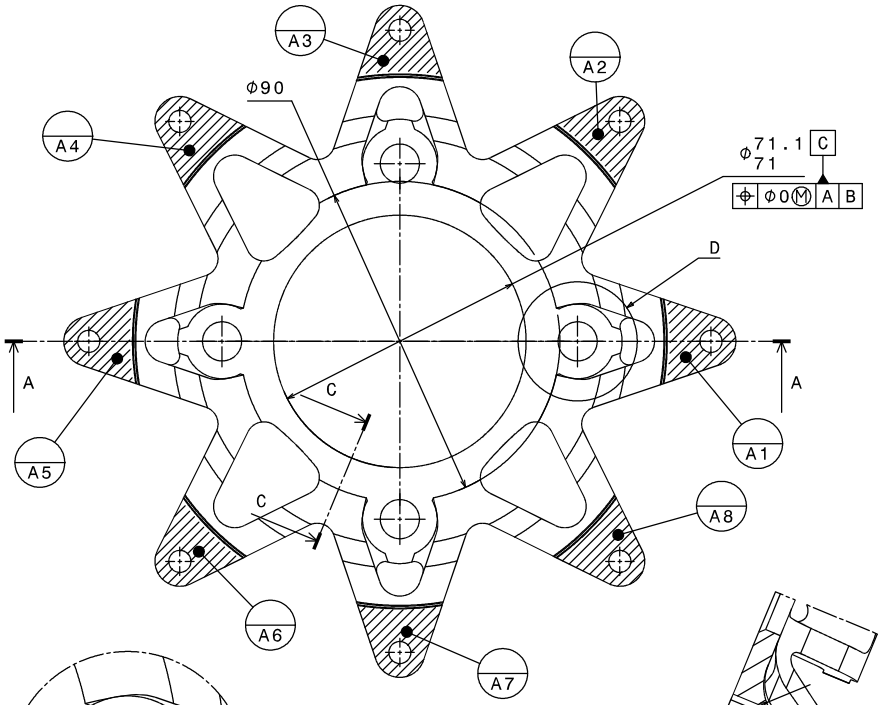

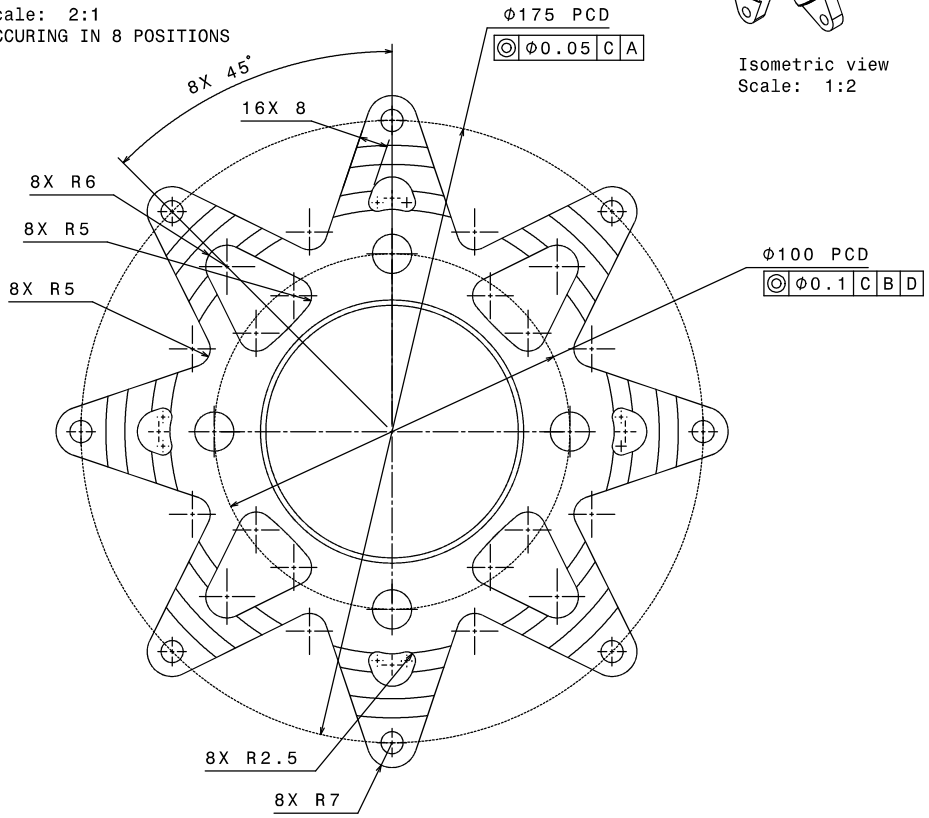

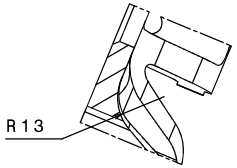

Section view C-C
OCCURING IN 8 POSITIONS

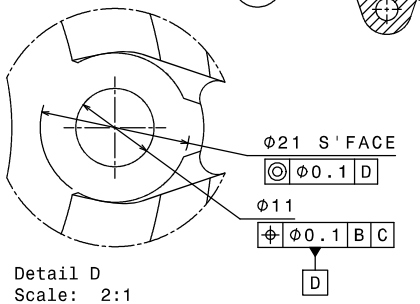

Detail D
Scale: 2:1
OCCURING IN 4 POSITIONS

Ra 3.2 (Ra 1.6)

NOTES:
1. FOR ALL UNDIMENSIONED FEATURES REFER TO CAD MODEL
2. BREAK ALL SHARP EDGES TO R0.2 OR 0.2X45° MAX
3. GENERAL PROFILE TOLERANCE 0.2 A B C

ALL DIMENSIONS ARE IN MM UNLESS OTHERWISE STATED TOLERANCES: LINEAR +/- 0.05 RADIAL +0.05	NO DEVIATION FROM THIS DRAWING WITHOUT THE WRITTEN CONSENT OF UBRACING
DRAWN BY: JAMES DAVIES 25/03/2019 DESIGNED BY: JAMES DAVIES APPROVED BY: ANTHONY LANE	DRAWING TITLE: UBR 22 FRONT WHEEL CENTRE PART No: UBR22_WHEELECENTRE_29MM_WT00005 QUANTITY: 4
	MATERIAL: ALUMINIUM 2024 / THIRD ANGLE PROJECTION / SIZE A2 / REV 1
	SCALE 1:1 (2:1) / CAD IS MASTER / SHEET 1/1

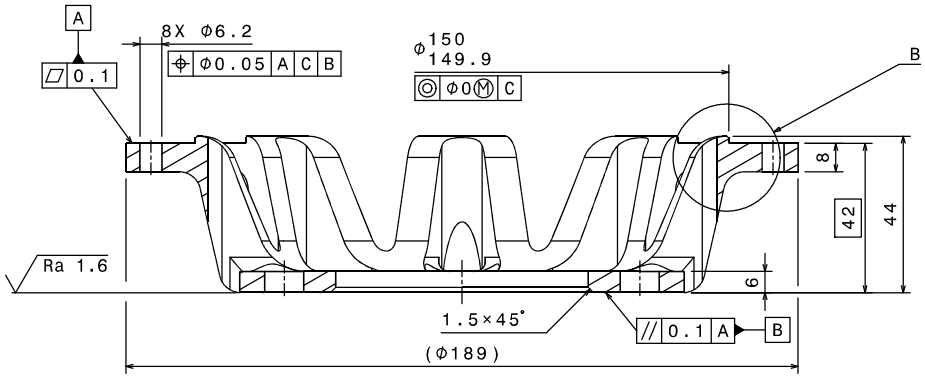

Section view A-A

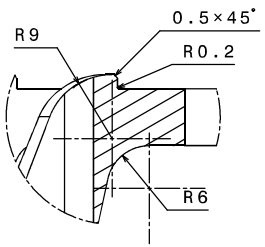

Detail B
Scale: 2:1
OCCURING IN 8 POSITIONS

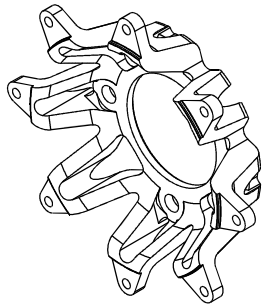

Isometric view
Scale: 1:2

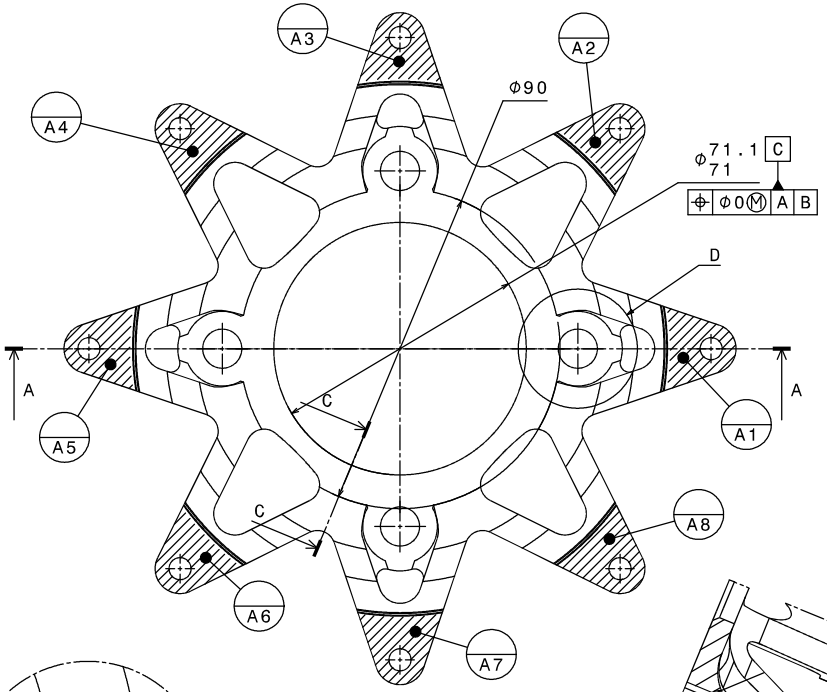

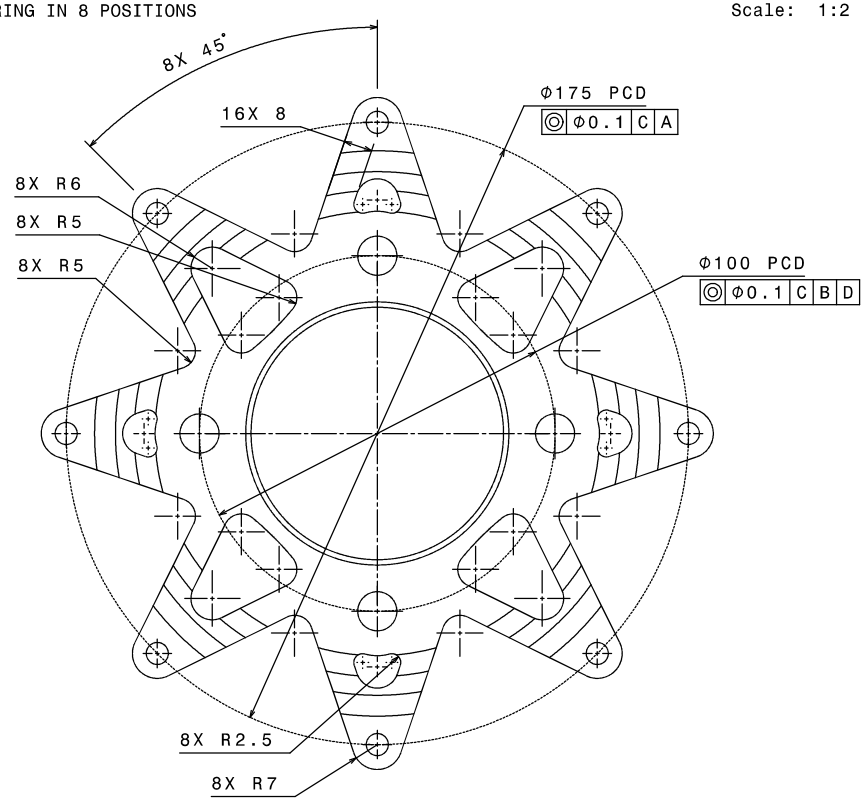

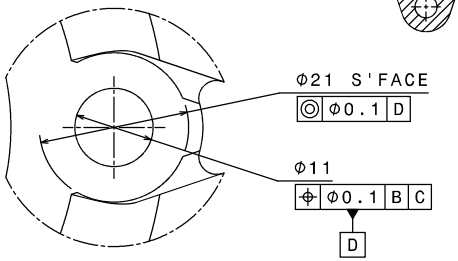

Detail D
Scale: 2:1
OCCURING IN 4 POSITIONS

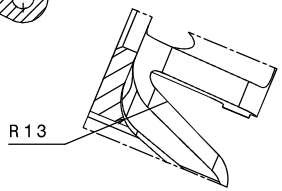

Section view C-C
OCCURING IN 8 POSITIONS

Ra 3.2 (Ra 1.6)

NOTES:
1. FOR ALL UNDIMENSIONED FEATURES REFER TO CAD MODEL
2. BREAK ALL SHARP EDGES TO R0.2 OR 0.2X45° MAX
3. GENERAL PROFILE TOLERANCE 0.2 A B C

ALL DIMENSIONS ARE IN MM UNLESS OTHERWISE STATED TOLERANCES: LINEAR +/- 0.05 RADIAL +0.05	NO DEVIATION FROM THIS DRAWING WITHOUT THE WRITTEN CONSENT OF UBRACING
DRAWN BY: JAMES DAVIES 25/03/19 DESIGNED BY: JAMES DAVIES APPROVED BY: ANTHONY LANE	DRAWING TITLE: UBR22 REAR WHEEL CENTRE PART No: UBR22_WHEEL_CENTRE_42MM_WT0004 QUANTITY: 4
	MATERIAL: ALUMINIUM 2024 / THIRD ANGLE PROJECTION / SIZE A2 / REV 1
	SCALE 1:1 (2:1) / CAD IS MASTER / SHEET 1/1

REV	DESCRIPTION	INIT	DATE
01A	INITIAL RELEASE	EPC	31/05/2025

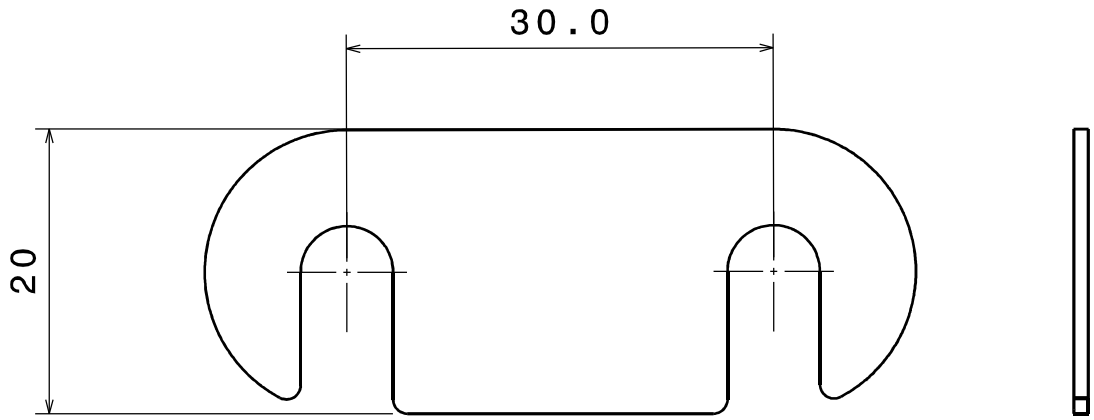

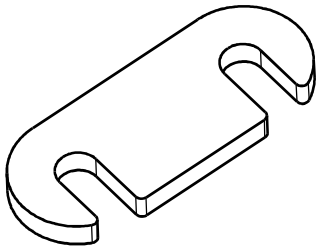

ISOMTRIC
JIG 2

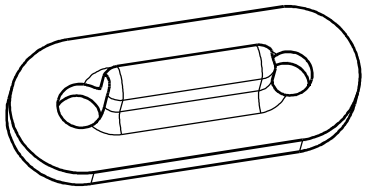

ISOMETRIC
JIG 1

UBRacing	MATERIAL CERTIFICATE REQUIRED DIMENSIONS IN MILIMETRES U.O.S	COMPONENT MASS (kg)	0.001	MATERIAL SPEC	Aluminium
				HEAT TREATMENT	N/A
A4	IF IN DOUBT - ASK DO NOT SCALE 0 DECIMAL PLACES ±0.50 1 DECIMAL PLACE ±0.25 2 DECIMAL PLACES ±0.10 3 DECIMAL PLACES ±0.02 GENERAL CONCENTRICITY 0.1 TIR ANGULAR TOLERANCE ±0.25°	DRAWN BY EPC		SURFACE TREATMENT	N/A
				DESCRIPTION	CAMBER SHIM AND JIGS
TEL.	+44 (0)121 414 4218				
E-MAIL.	ubracing@gmail.com				
	REMOVE BURRS AND SHARP EDGES				
This drawing and the copyright herein are the property of UBRacing. It is private & confidential and is issued on the express condition that it is not modified, copied or communicated to any other party without the written consent of UBRacing.		SCALE	2:1	SHEET 1/1	PART NUMBER UBR28_ CAMBER_SHIM

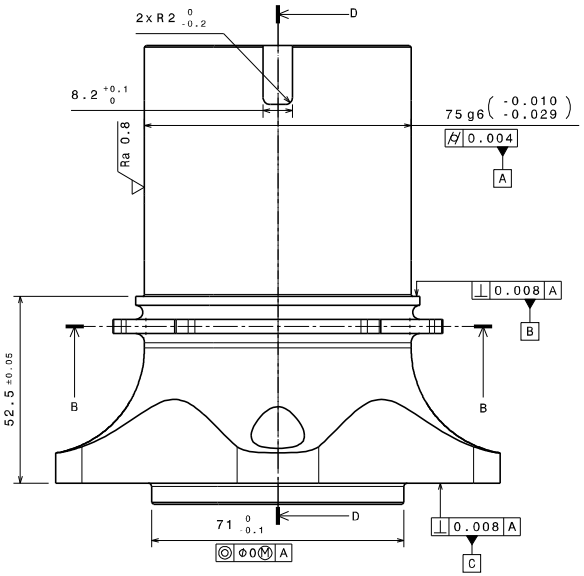

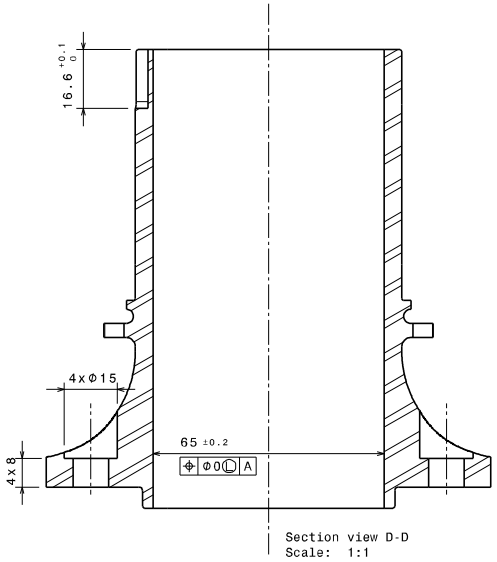

Section view D-D
Scale: 1:1

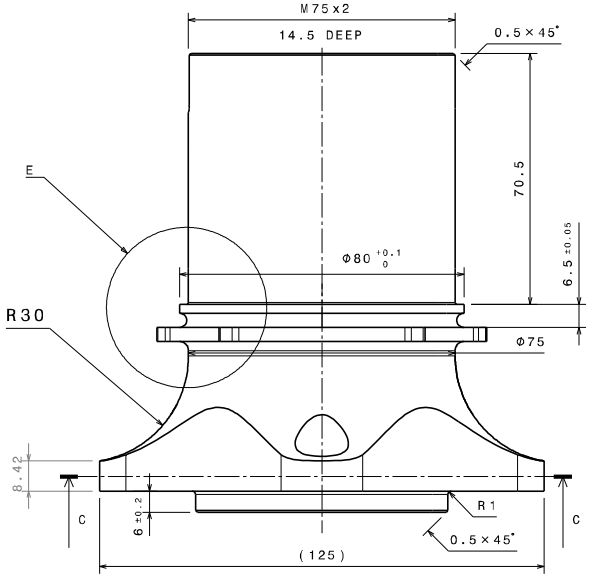

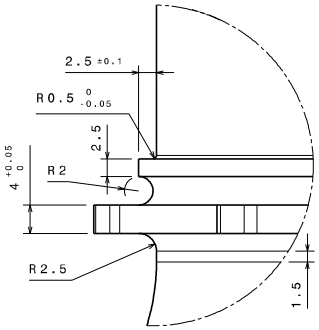

Detail E
Scale: 2:1

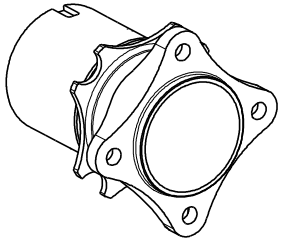

Isometric view
Scale: 1:2

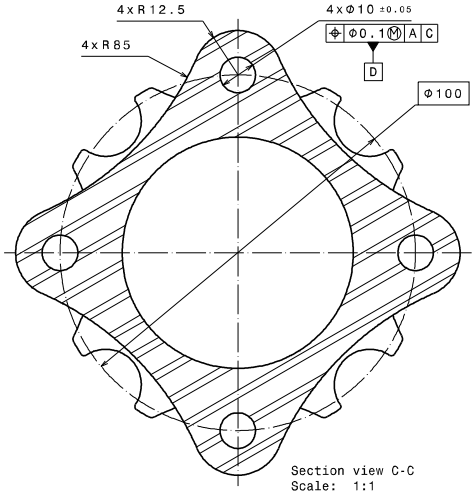

Section view C-C
Scale: 1:1

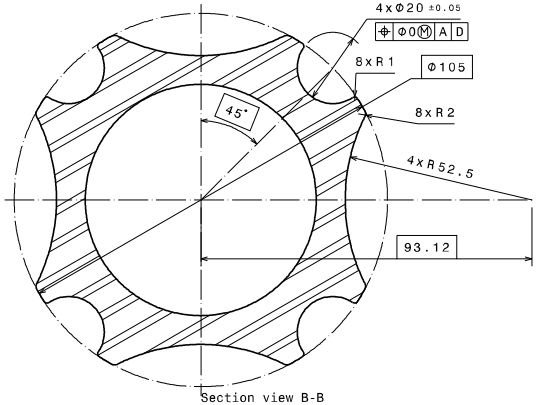

Section view B-B
Scale: 1:1

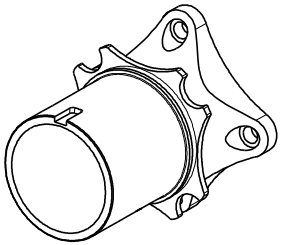

Isometric view
Scale: 1:2

ALL DIMENSIONS ARE IN MM UNLESS OTHERWISE STATED TOLERANCES: LINEAR +/- 0.1 RADIAL +/- 0.05	NO DEVIATION FROM THIS DRAWING WITHOUT THE WRITTEN CONSENT OF UBRACING		
DRAWN: ANTHONY LANE 12/12/2015 DESIGNED: SAMUEL BROWN APPROVED BY: ANTHONY LANE	DRAWING TITLE: PART NO : UBR28_FLHUB-SU0001-AA		
	MATERIAL: ALUMINIUM 7075 T6	THIRD ANGLE PROJECTION	SIZE A2	NO OFF 2
	SCALE 1:1	CAD IS MASTER	SHEET 1/1

REV	DESCRIPTION	INIT	DATE
01A	INITIAL RELEASE	EPC	25/04/2025

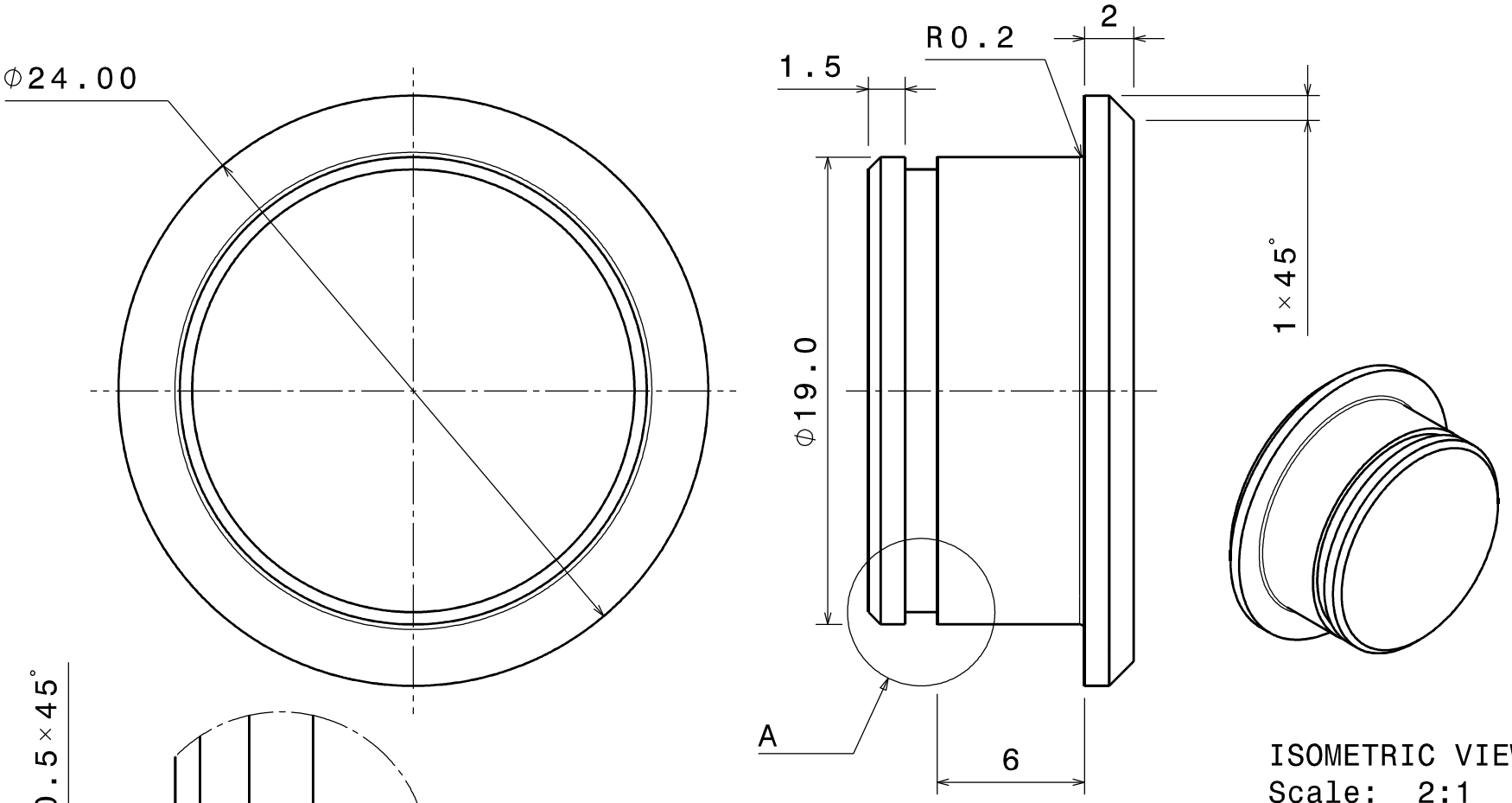

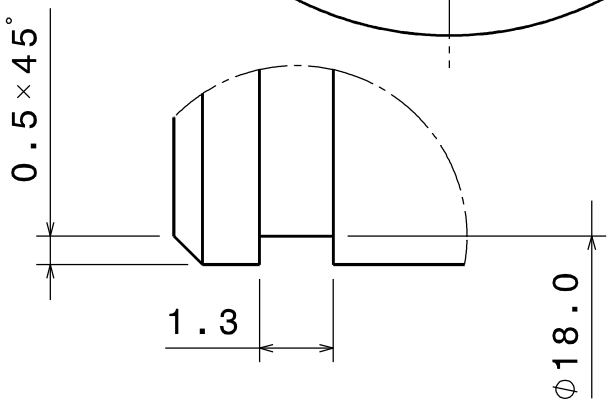

DETAIL A
SCALE 8:1

UBRacing	MATERIAL CERTIFICATE REQUIRED DIMENSIONS IN MILIMETRES U.O.S	COMPONENT MASS (kg)	0.01	MATERIAL SPEC	7075- T6 ALUMINIUM
				HEAT TREATMENT	N/A
A4	IF IN DOUBT - ASK DO NOT SCALE	DRAWN BY	EPC	SURFACE TREATMENT	N/A
	0 DECIMAL PLACES ±0.50 1 DECIMAL PLACE ±0.25 2 DECIMAL PLACES ±0.10 3 DECIMAL PLACES ±0.02 GENERAL CONCENTRICITY 0.1 TIR ANGULAR TOLERANCE ±0.25°			DESCRIPTION	FRONT DISC BRAKE BUTTON
TEL.	+44 (0)121 414 4218				
E-MAIL.	ubracing@gmail.com				
	REMOVE BURRS AND SHARP EDGES	SCALE	4:1	SHEET 1/1	PART NUMBER UBR28_OB_FRONTDISCBRAKE BUTTON

This drawing and the copyright herein are the property of UBRacing. It is private & confidential and is issued on the express condition that it is not modified, copied or communicated to any other party without the written consent of UBRacing.

REV	DESCRIPTION	INIT	DATE
01A	INITIAL RELEASE	EPC	19/03/2025

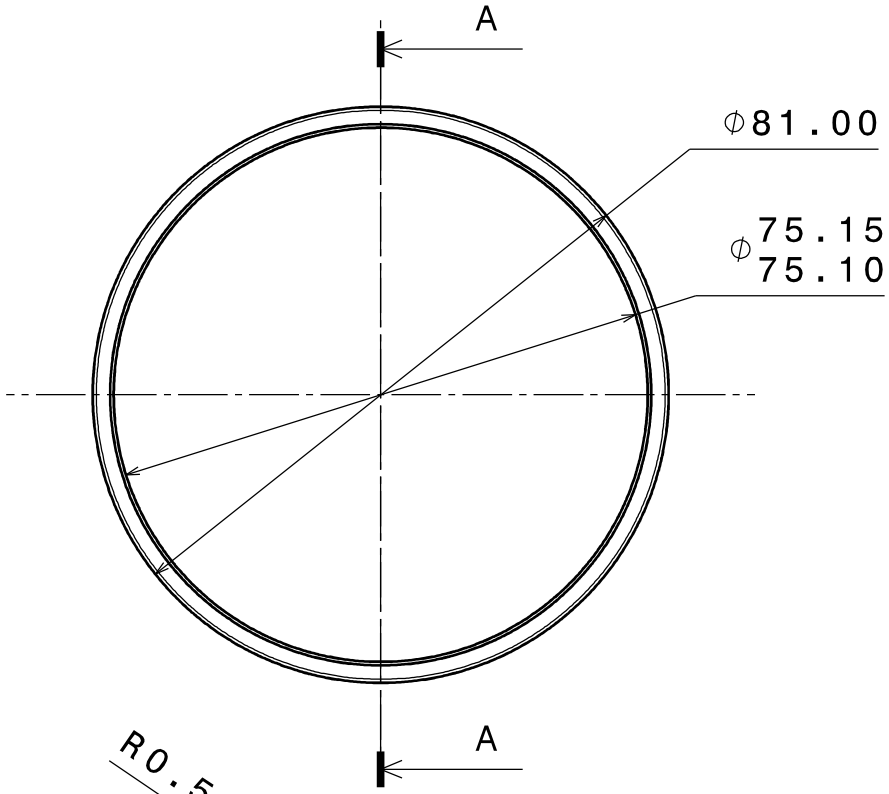

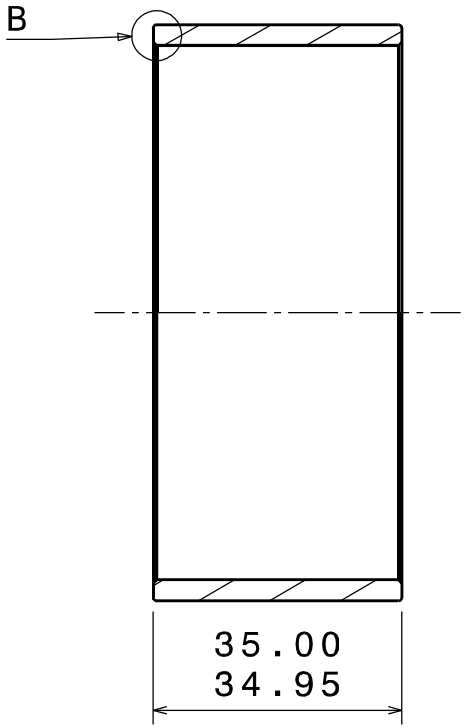

SECTION A-A
1:1

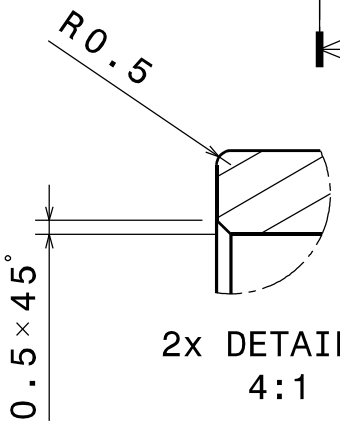

2x DETAIL B
4:1

NOTES:
QUANTITY X2

UBRacing	MATERIAL CERTIFICATE REQUIRED DIMENSIONS IN MILIMETRES U.O.S	COMPONENT MASS (kg)	0.060	MATERIAL SPEC	ALUMINIUM 7075
				HEAT TREATMENT	N/A
A4	IF IN DOUBT - ASK DO NOT SCALE 0 DECIMAL PLACES ±0.50 1 DECIMAL PLACE ±0.25 2 DECIMAL PLACES ±0.10 3 DECIMAL PLACES ±0.02 GENERAL CONCENTRICITY 0.1 TIR ANGULAR TOLERANCE ±0.25° REMOVE BURRS AND SHARP EDGES	DRAWN BY EPC		SURFACE TREATMENT	N/A
				DESCRIPTION	UBR28 FRONT UPRIGTH BEARING SPACER
TEL.	+44 (0)121 414 4218				
E-MAIL.	ubracing@gmail.com				
This drawing and the copyright herein are the property of UBRacing. It is private & confidential and is issued on the express condition that it is not modified, copied or communicated to any other party without the written consent of UBRacing.		SCALE	1:1	SHEET 1/1	PART NUMBER UBR28_OB_N_350

REV	DESCRIPTION	INIT	DATE
01A	INITIAL RELEASE	EPC	19/03/2025

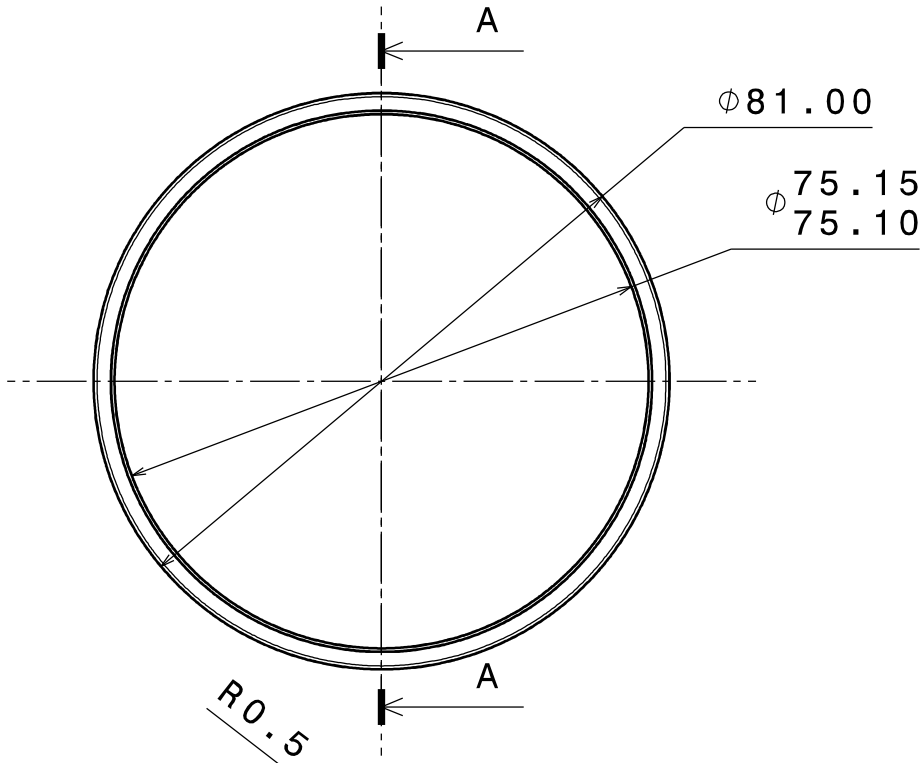

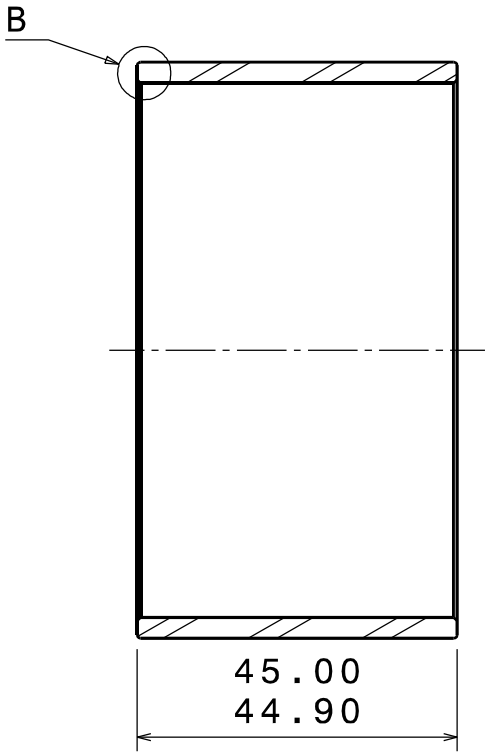

SECTION A-A

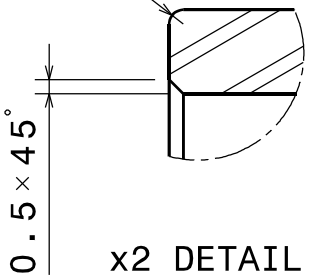

x2 DETAIL B
4:1

NOTES:
QUANTITY x2

UBRacing	MATERIAL CERTIFICATE REQUIRED DIMENSIONS IN MILIMETRES U.O.S	COMPONENT MASS (kg)	0.080	MATERIAL SPEC	ALUMINIUM 7075
				HEAT TREATMENT	N/A
A4	IF IN DOUBT - ASK DO NOT SCALE 0 DECIMAL PLACES ±0.50 1 DECIMAL PLACE ±0.25 2 DECIMAL PLACES ±0.10 3 DECIMAL PLACES ±0.02 GENERAL CONCENTRICITY 0.1 TIR ANGULAR TOLERANCE ±0.25°	DRAWN BY	EPC	SURFACE TREATMENT	N/A
				DESCRIPTION	UBR26 REAR UPRIGTH BEARING SPACER
TEL.	+44 (0)121 414 4218				
E-MAIL.	ubracing@gmail.com				
	REMOVE BURRS AND SHARP EDGES	SCALE	1:1	SHEET 1/1	PART NUMBER UBR28_OB_N_450

This drawing and the copyright herein are the property of UBRacing. It is private & confidential and is issued on the express condition that it is not modified, copied or communicated to any other party without the written consent of UBRacing.

REV	DESCRIPTION	INIT	DATE
01A	INITIAL RELEASE	EPC	25/04/2025

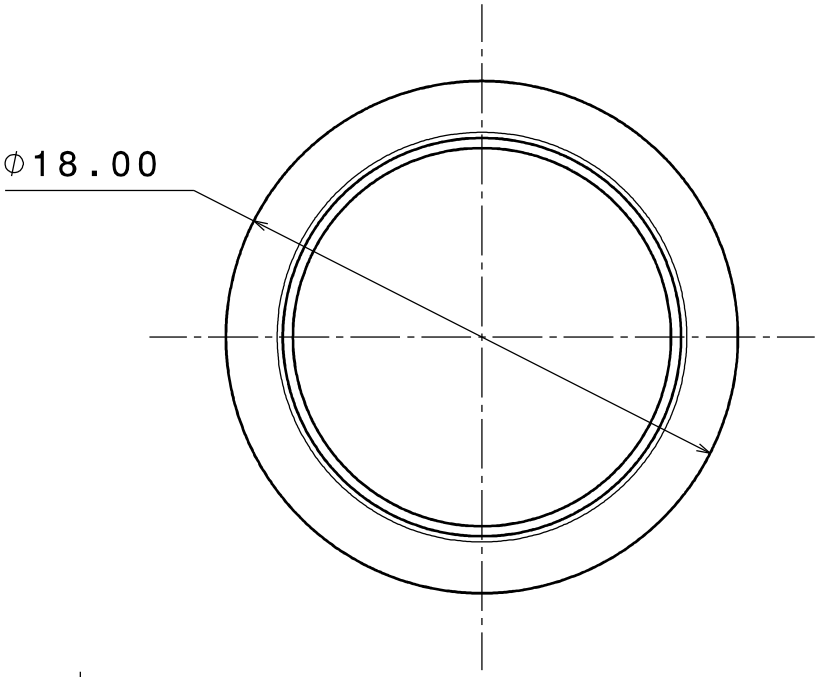

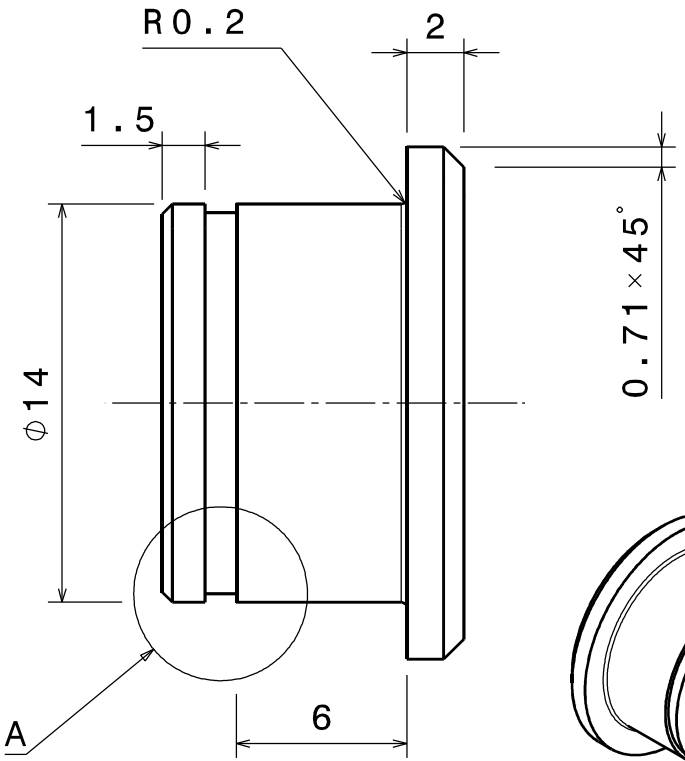

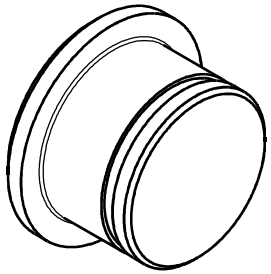

ISOMETRIC VIEW
SCALE 2:1

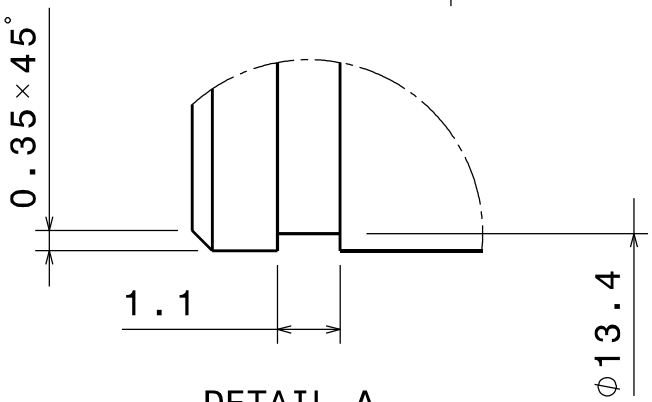

DETAIL A
SCALE 8:1

UBRacing	MATERIAL CERTIFICATE REQUIRED DIMENSIONS IN MILIMETRES U.O.S	COMPONENT MASS (kg)	0.005	MATERIAL SPEC	7075- T6 ALUMINIUM
				HEAT TREATMENT	N/A
A4	IF IN DOUBT - ASK DO NOT SCALE	DRAWN BY	EPC	SURFACE TREATMENT	N/A
	0 DECIMAL PLACES ±0.50 1 DECIMAL PLACE ±0.25 2 DECIMAL PLACES ±0.10 3 DECIMAL PLACES ±0.02 GENERAL CONCENTRICITY 0.1 TIR ANGULAR TOLERANCE ±0.25°			DESCRIPTION	REAR BRAKE BUTTON
TEL.	+44 (0)121 414 4218				
E-MAIL.	ubracing@gmail.com				
	REMOVE BURRS AND SHARP EDGES				
		SCALE	4:1	SHEET 1/1	PART NUMBER UBR28_08_REARBRAKEBUTTON

This drawing and the copyright herein are the property of UBRacing. It is private & confidential and is issued on the express condition that it is not modified, copied or communicated to any other party without the written consent of UBRacing.

REV	DESCRIPTION	INIT	DATE
01A	INITIAL RELEASE	EPC	25/04/2025

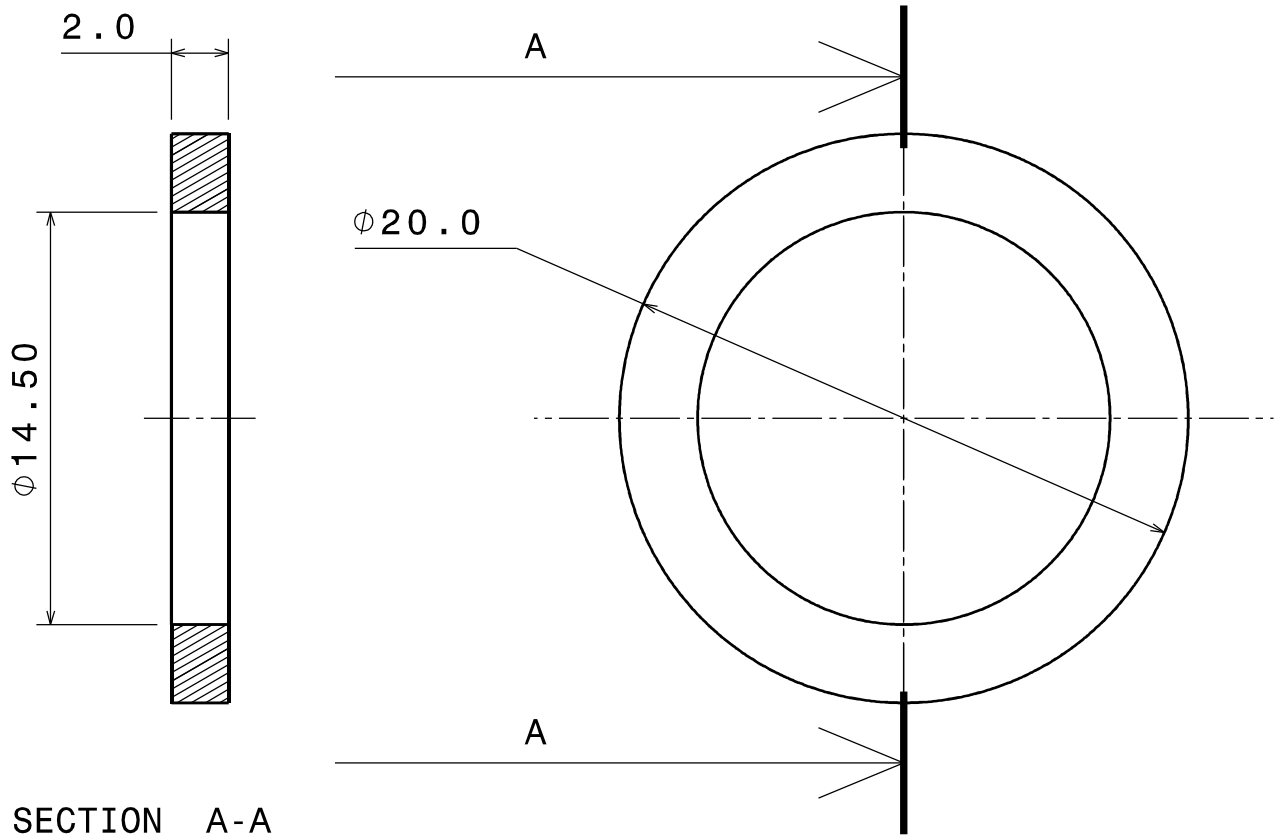

SECTION A-A
SCALE 4:1

UBRacing	MATERIAL CERTIFICATE REQUIRED DIMENSIONS IN MILIMETRES U.O.S	COMPONENT MASS (kg)	0.001	MATERIAL SPEC	7075- T6 ALUMINIUM
				HEAT TREATMENT	N/A
A4	IF IN DOUBT - ASK DO NOT SCALE 0 DECIMAL PLACES ±0.50 1 DECIMAL PLACE ±0.25 2 DECIMAL PLACES ±0.10 3 DECIMAL PLACES ±0.02 GENERAL CONCENTRICITY 0.1 TIR ANGULAR TOLERANCE ±0.25°	DRAWN BY EPC		SURFACE TREATMENT	N/A
				DESCRIPTION	REAR BRAKE BUTTON SPACER
TEL.	+44 (0)121 414 4218				
E-MAIL.	ubracing@gmail.com				
	REMOVE BURRS AND SHARP EDGES				
This drawing and the copyright herein are the property of UBRacing. It is private & confidential and is issued on the express condition that it is not modified, copied or communicated to any other party without the written consent of UBRacing.		SCALE	4:1	SHEET 1/1	PART NUMBER UBR28_OB_REAR BRAKEBUTTON_SPACER

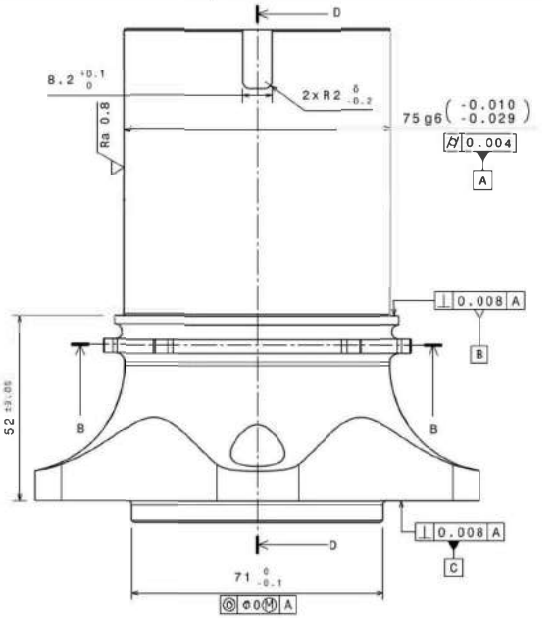

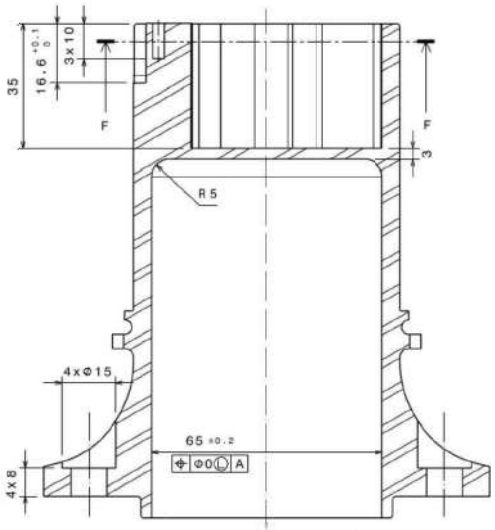

Section view D-D
Scale: 1:1

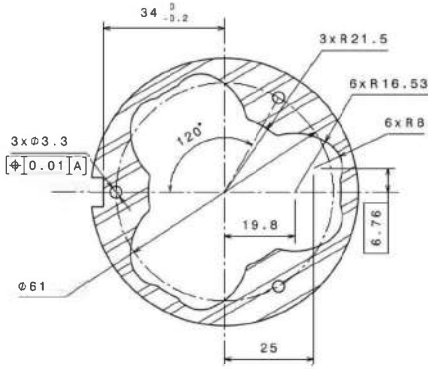

Section view F-F
Scale: 1:1

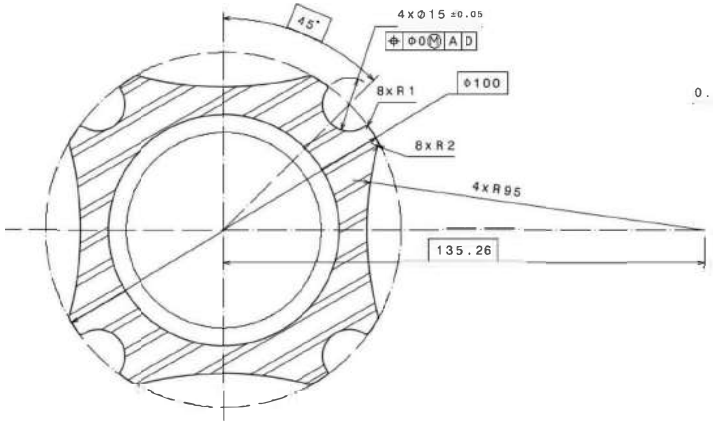

Section view B-B
Scale: 1:1

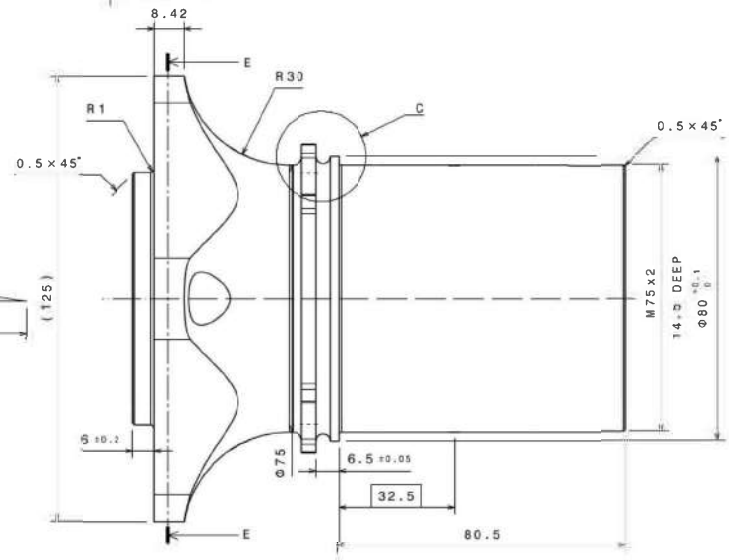

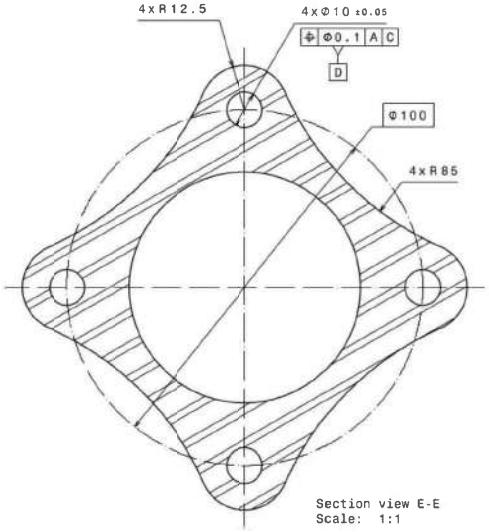

Section view E-E
Scale: 1:1

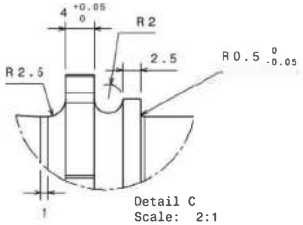

Detail C
Scale: 2:1

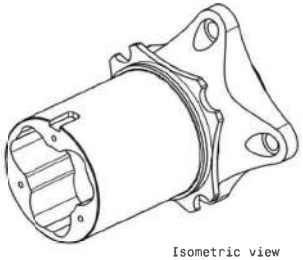

Isometric view
Scale: 1:2

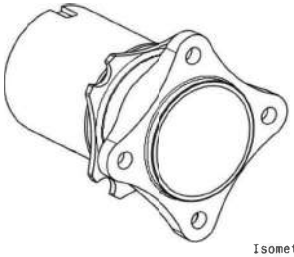

Isometric view
Scale: 1:2

ALL DIMENSIONS ARE IN MM UNLESS OTHERWISE STATEO
TOLERANCES: LINEAR +/- 0.1
RADIAL +/- 0.05

NO DEVIATION FROM THIS DRAWING WITHOUT THE WRITTEN CONSENT OF UBRACING

DRAWN:
ANTHONY LANE 16/02/2017
DESIGNED:
SAMUEL BROWN
APPROVED BY:
NATHAN BURROUGH

DRAWING TITLE:
PART NO:UBR28_RLHUB_SU-00001-AA

MATERIAL:	THIRD ANGLE PROJECTION	SIZE	NO OFF
ALUMINIUM 7075 T6		A2	2

SCALE 1:1	CAD IS MASTER	SHEET 1/1

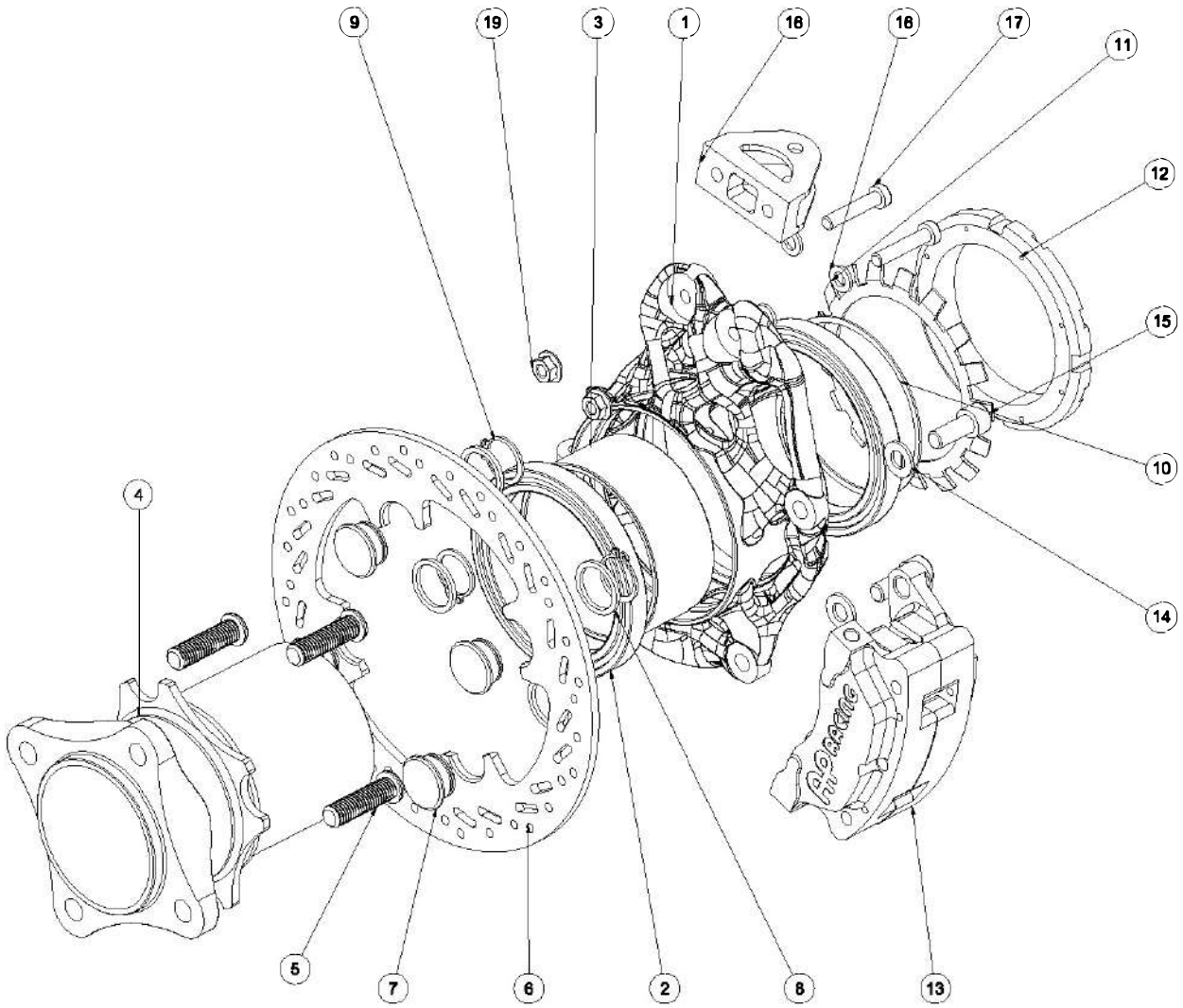

PARTS LIST			
ITEM	QTY	PART NUMBER	DESCRIPTION
1	1	UBR26_OB_L_300	MACHINED UPRIGHT
2	2	61815-2RS-Y	OUTBOARD BEARING
3	1	UBR26_OB_N_350	BEARING SPACER
4	1	UBR26_OB_L_315	FRONT LEFT HUB
5	4		3/8" UNF MINI WHEEL STUD 35mm
6	1	UBR26_OB_N_022	FRONT DISC BRAKE
7	4	UBR26_OB_N_011	FRONT BRAKE BUTTON
8	4	UBR26_OB_N_012	FRONT BRAKE BUTTON SPACER
9	4		CIRCLIP
10	1	UBR26_OB_N_023	THRUST WASHER
11	1	UBR26_OB_N_024	LOCKING TAB
12	1	UBR26_OB_N_025	LOCK RING
13	1	CP4227-2S0	FRONT BRAKE CALIPER
14	2		M6 WASHER
15	2		M6 X 1 X 15 CH
16	1	UBR26_OB_N_028	UPRIGHT CLEVIS
17	2		M6 X 1 X 30 CH
18	2		M6 WASHER
19	2		M6 K-NUT

NOTES:
- APPLY BEARING RETAINER
- APPLY COPPER SLIP TO THE THREAD

UBRacing

A1 DO NOT SCALE

EPC

FRONT LEFT OUTBOARD ASSEMBLY

SCALE 1:1

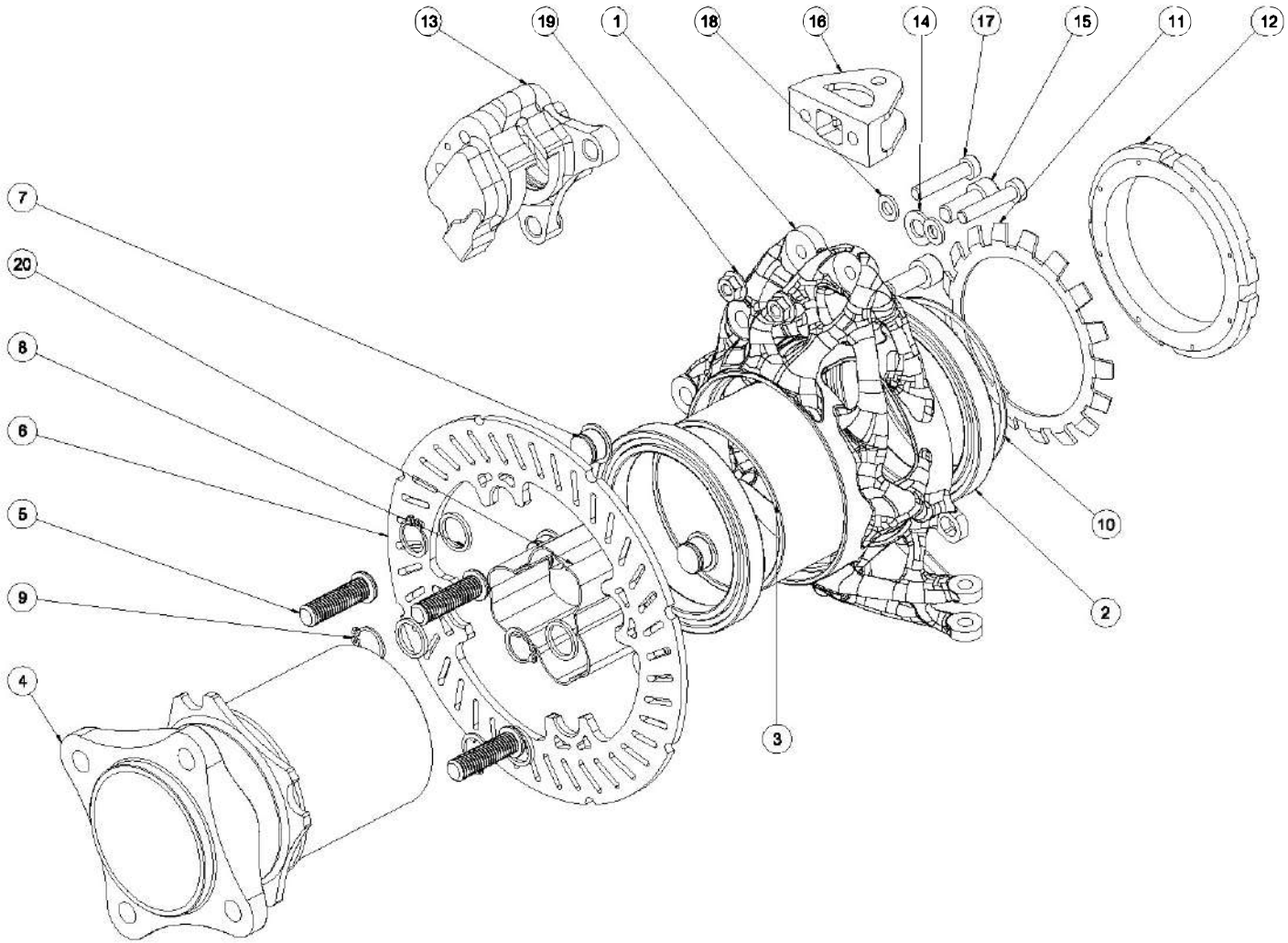

PARTS LIST			
ITEM	QTY	PART NUMBER	DESCRIPTION
1	1	UBR28_OB_L_400	MACHINED UPRIGHT
2	2	81815-2RS-Y	OUTBOARD BEARING
3	1	UBR28_OB_N_450	BEARING SPACER
4	1	UBR28_OB_L_415	REAR LEFT HUB
5	4		3/8" UNF MINI WHEEL STUD 35mm
6	1	UBR28_OB_N_122	REAR DISC BRAKE
7	4	UBR28_OB_N_013	REAR BRAKE BUTTON
8	4	UBR28_OB_N_014	REAR BRAKE BUTTON SPACER
9	4		CIRCLIP
10	1	UBR28_OB_N_023	THRUST WASHER
11	1	UBR28_OB_N_024	LOCKING TAB
12	1	UBR28_OB_N_025	LOCK RING
13	1	CP4226-2S0	REAR BRAKE CALIPER
14	2		M8 WASHER
15	2		M8 X 1 X 15 CH
16	1	UBR28_OB_N_028	UPRIGHT CLEVIS
17	2		M6 X 1 X 30 CH
18	2		M6 WASHER
19	2		M6 K-NUT
20	1	UBR28_DR_N_204	DRIVE SHAFT INSERT

NOTES:
- APPLY BEARING RETAINER
- APPLY COPPER SLIP TO THE THREAD

UBRacing

A1 DO NOT SCALE

DRAWN BY: EPC

REAR LEFT OUTBOARD ASSEMBLY

SCALE 1:1